ALWAYSE

Ball Transfer Units

Catalogue 13

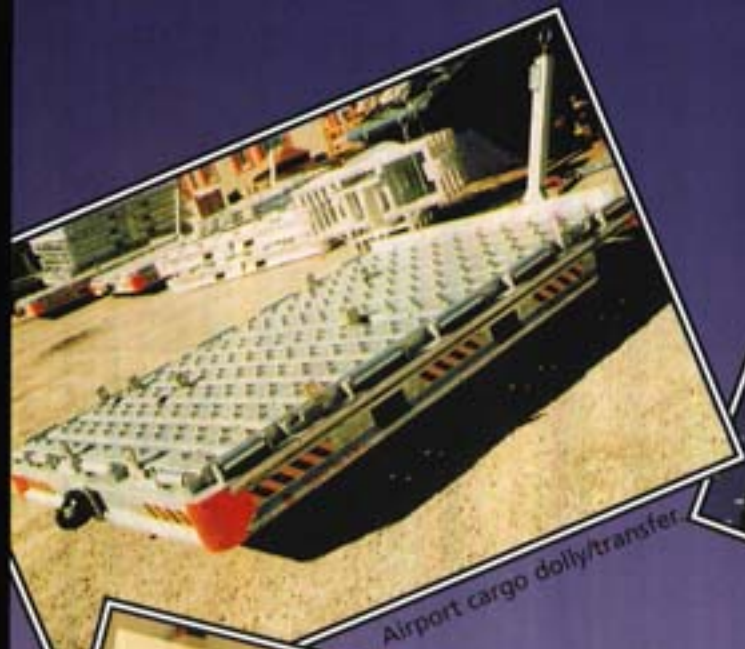

Airport cargo dolly/transfer.

ABB-Sweden.

Typical material handling system.

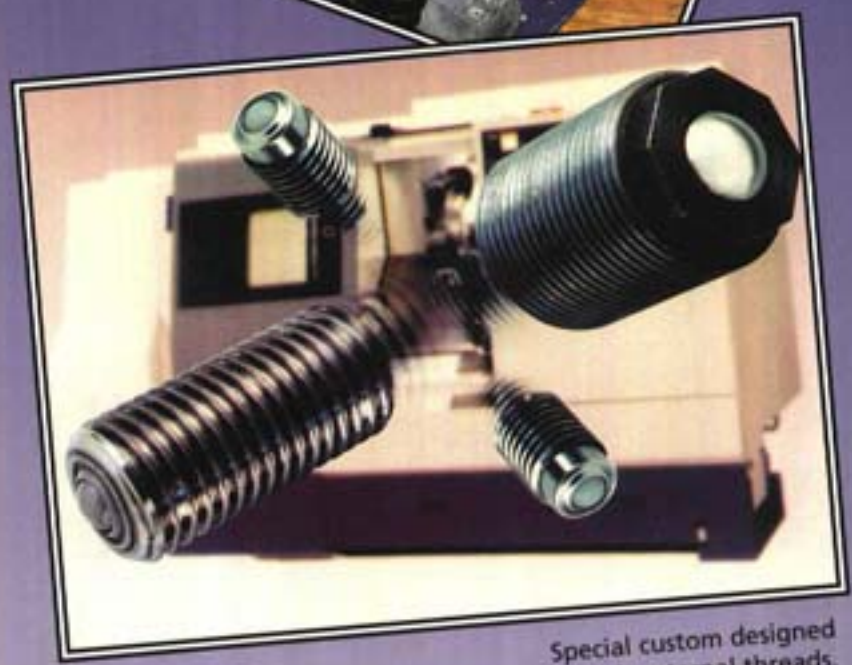

Special custom designed units with external threads.

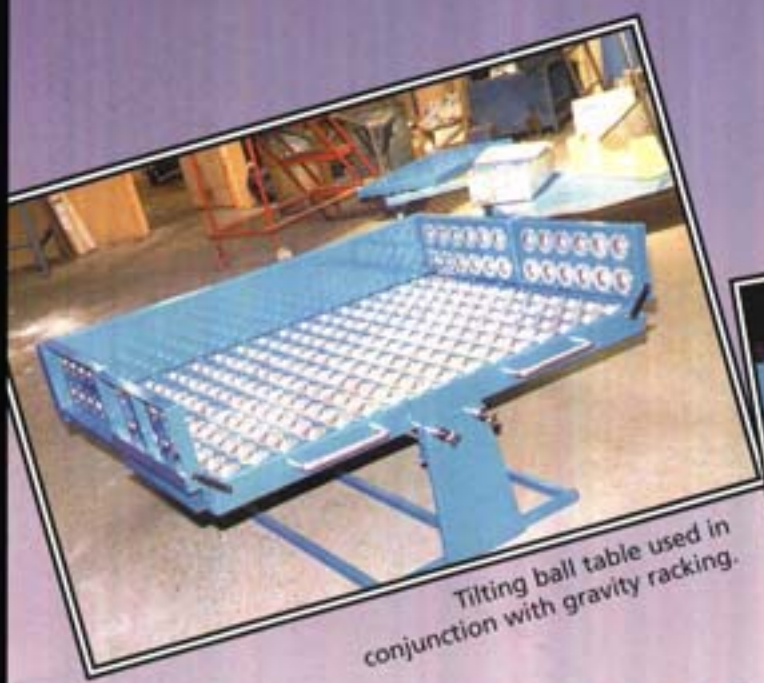

Tilting ball table used in conjunction with gravity racking.

Live/dead ball tables to move and secure heavy items.

Specially designed assembly area.

Ball table with hinged section.

Resin transfer moulds in the aerospace industry.

DHL Heathrow.

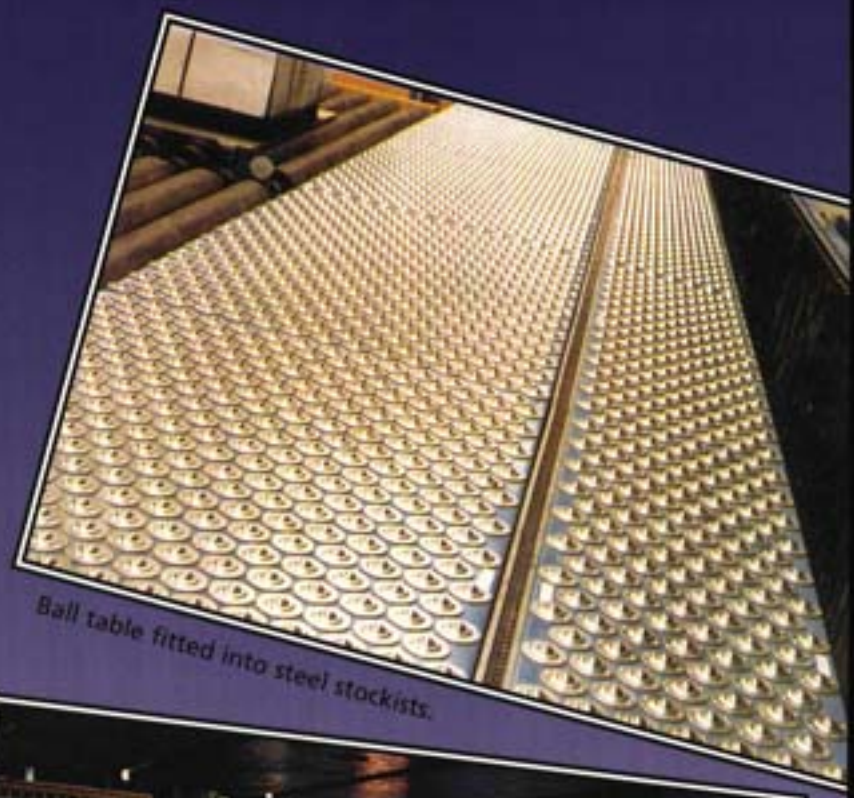

Ball table fitted into steel stockists.

Die/tool table designed, manufactured and installed at Premier Spring and Presswork.

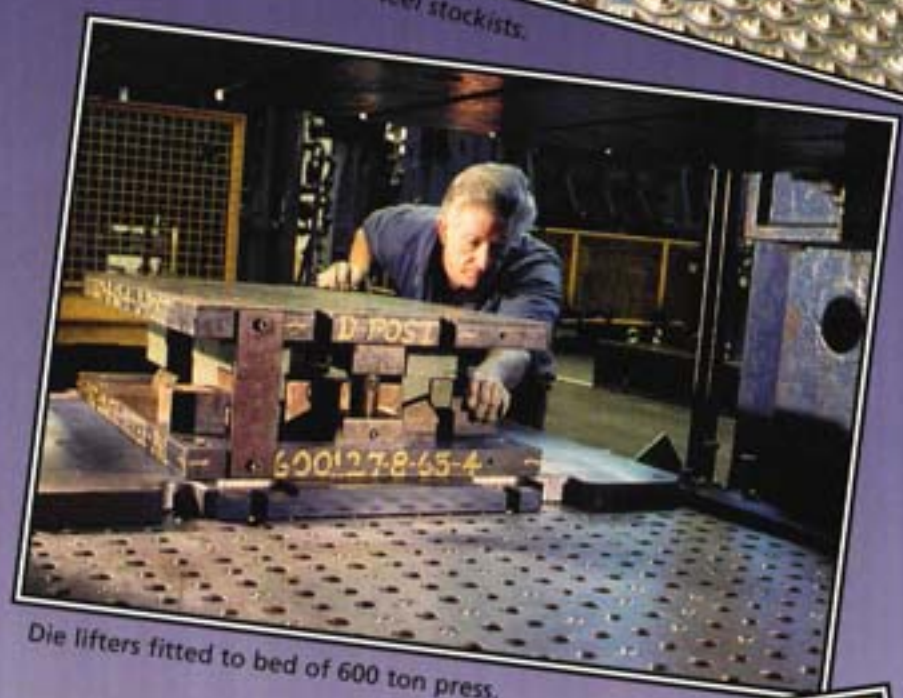

Die lifters fitted to bed of 600 ton press.

International material handling exhibition - Japan.

Special die table with slots for fork-lift truck forks.

Federal Express facility at Hong Kong International Airport.

Specialised ball stands.

Special jig in use on saloon racing car.

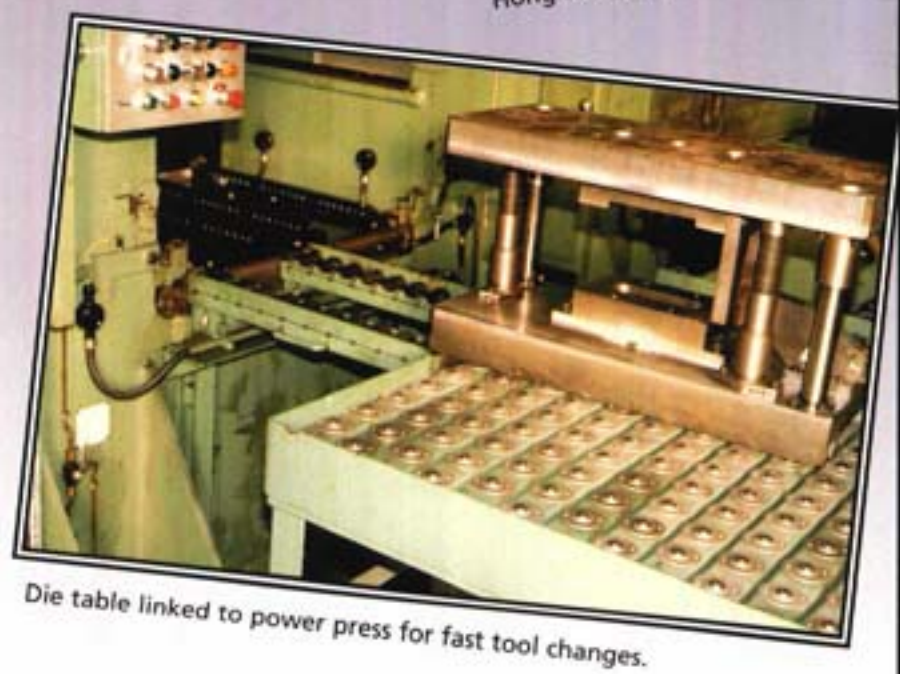

Die table linked to power press for fast tool changes.

Ball table to be used in an assembly area.

Ball units used for air cargo handling.

Units installed into air cargo vehicle as part of a combined cargo handling system.

Die table for fast tool changes.

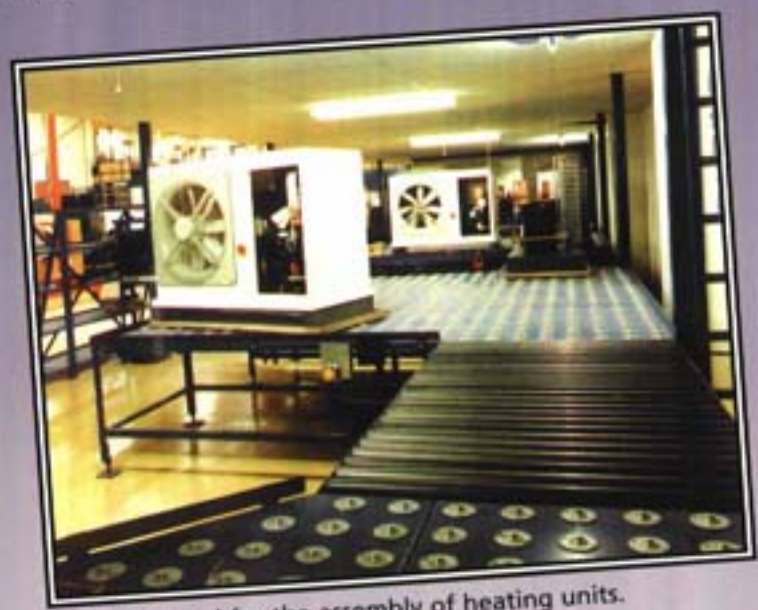

Ball units used for the assembly of heating units.

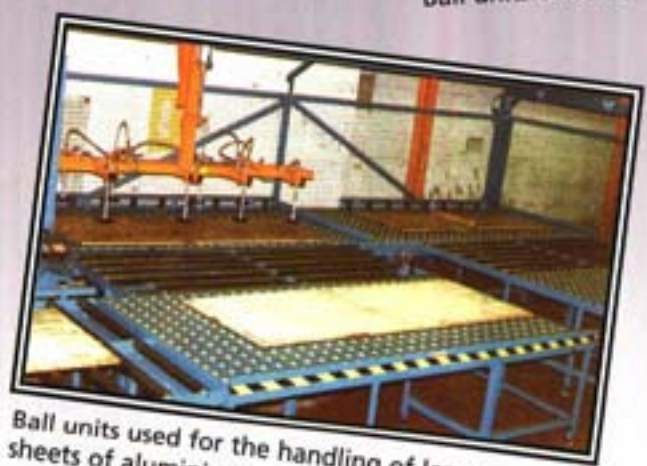

Ball units used for the handling of large sheets of aluminium.

Air cargo facility.

ALWAYSE

Ball Transfer Units

Alwayse Engineering Limited
Warner Street
Birmingham B12 OJG
England

Telephone: 0121 772 8481
(International): 44 121 772 8481

Fax: 0121 771 0327
(International): 44 121 771 0327

Home page: www.alwayse.co.uk
E-mail: sales@alwayse.co.uk

FREE Technical Advice:
We offer a free technical advice service - if you are unsure of the correct ball unit to use, ask us. We do not accept liability for the choice of unit if we are not consulted.

Alwayse Engineering Limited

Alwayse Engineering was established in 1939 when a small engineering company, Sheridan Tools, was purchased. Later its name was changed to "Alwayse" meaning that the units are multi-directional and move in all directions or ways - hence "Alwayse". The distinctive spelling adds to the company's individuality.

The present chairman, Mr L.W. Pinnick, has overseen its growth and development since the late 1940s.

Alwayse Ball Transfer Units are used as part of a conveyor or material handling system to enable loads both light and heavy, to be moved or transferred in any direction. As the originators of the Ball Transfer Unit over 50 years ago, we have become an important part of the material handling industry.

Whether ball units are used for loading/feeding machines, moving goods/materials, as an alternative to a castor, or in a form of linear operation, they have become an integral part of industry and provide an important and essential service.

Alwayse Ball Units are used in all industries throughout the World and over 2,000,000 are sold every year.

TECHNICAL INFORMATION

DESIGN & CONSTRUCTION

Alwayse ball units are a multi-directional, material handling system, manufactured from high quality materials in our Birmingham factory.

They consist of a large load-bearing ball which sits upon many small balls encapsulated in a hemi-spherical cup. The housing can contain a seal to clean the load ball as it rotates. The design greatly reduces friction and allows heavy loads to be moved with a minimum of effort.

Our ball units may be used at any orientation but deviation from the vertical may result in a reduction in the stated load ratings quoted in this catalogue.

FIXING METHODS

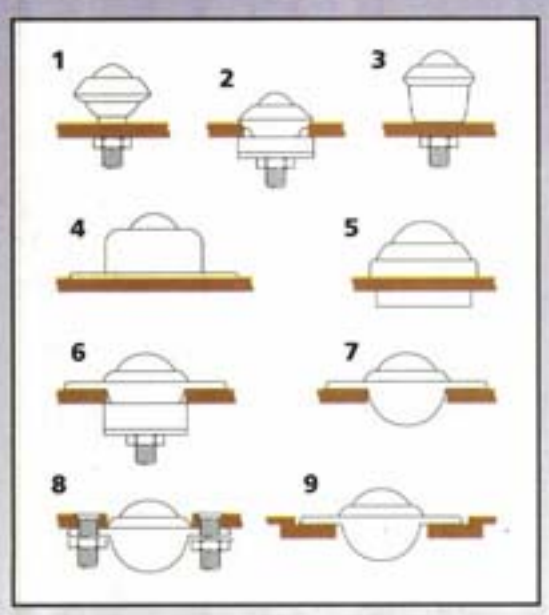

There are various methods of fixing Alwayse ball units. A wide range of fittings enable them to be used with various different materials.

Fixing clips are available for most designs - see pages 28 & 29.

MATERIALS

Type	Load Ball	Support Balls	Housing
13	Carbon Steel 60-66RC	Carbon Steel 60-66RC	Carbon Steel Bright Zinc Plated
14	Nylon 66	Carbon Chrome 60-66RC	Carbon Steel Bright Zinc Plated
15	Stainless Steel AISI 420 52-58RC	Stainless Steel AISI 420 52-58RC	Stainless Steel AISI 304 SelfColour
16	Stainless Steel AISI420 52-58RC	Stainless Steel AISI 420 52-58RC	Carbon Steel Bright Zinc Plated

Alwayse ball units are available in various materials. The material required for your ball units should be quoted when ordering - see page 3 for ordering details.

Lubrication

Each unit is pre-lubricated during manufacture and normally does not require further attention. In certain instances we will advise on lubrication. Greasing or oil points can be incorporated in some units.

Cleaning

A suitable cleaning or release fluid should be used in dirty conditions. For washing, a suitable detergent such as paraffin, for freeing, a suitable agent such as WD40 - please consult technical support.

Most designs have dirt exit holes incorporated in the bearing cup, or these can be added on request.

Shock Loads

When calculating loads, consider the possibility of impact caused by incorrect levels. Spring loaded units will reduce wear and tear if there are regular shock impacts. Shock loading can also be reduced by fitting compressible pads.

Ball units can also be made retractable by other means, such as pneumatic or hydraulic cylinders, cams or levers. They can be programmed to operate in sequence. All stated loads in the catalogue are dynamic loads.

Self Levelling

Can be achieved by fitting rubber pads. This reduces excessive loads on just a few units. Details on request.

Temperature Range

Min. -30°c to max. +70°c continuous, or +100°c intermittent. Special seals may need to be fitted to suit extreme conditions. In clean conditions and without seals +150°c to +200°c are possible, using Type 15 units at reduced loads.

Conveying Speed

Maximum recommended conveying speed is 1 metre per second for steel load balls and 0.25 metres per second for nylon.

Seals

These help resist ingress of dirt and swarf. They can be omitted on request.Woollen felt seals fitted as standard.

Breakaway Coefficient of Friction

The average breakaway friction for new ball units containing steel balls in a good working environment is 0.01 to 0.015 (1% to 1.5% of the load) and 0.02 to 0.025 (2% to 2.5%) for units with felt seals.

BALL TABLES

Red arrows indicate ideal movement.

Square Pitch

Diamond Pitch

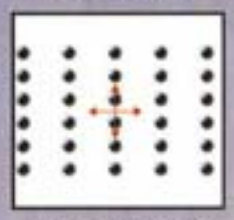

Elongated Pitch

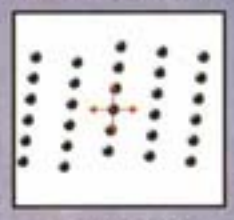

Elongated Diagonal Pitch

Vee location

QUANTITY CALCULATION

The weight of the article to be conveyed should be divided by 3. The result will give the maximum load any single ball will bear.

On any accurately levelled or flexible surface, a number greater than 3 may be used. The surface hardness and condition of the article should be considered to avoid ball unit penetration.

Spacing

The pitch is calculated by dividing the narrowest dimension by 3·5, i.e. if the narrowest dimension is 350mm divided by 3·5=100mm pitch between ball centres. This ensures 3 ball units are always beneath the narrowest dimension of the load at any one time.

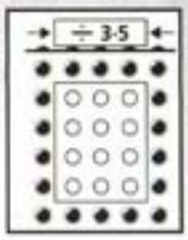

 IMPORTANT - IF YOU ARE UNSURE, CONSULT OUR FREE TECHNICAL SERVICE. TELEPHONE: 0121 772 8481 FACSIMILE: 0121 771 0327

APPLICATIONS

There are many possible applications for Alwayse ball transfer units, where loads need to be moved smoothly, precisely and with minimum effort in any direction.

Some typical applications include cargo and baggage handling (shown above), assembly lines, as a castor, machine loading, sliding-door systems, machine tables, etc.

Alwayse not only advise and supply ball units, but also regularly design and manufacture complete assemblies ready for customers to use.

QUALITY

Alwayse Engineering Limited have a policy of continually improving the product range with new innovative and creative ideas using the latest CNC machinery and production/inspection methods.

Our specially designed ball unit test machine, regularly used to test production units, together with many years of research and experience, ensures world-class performance.

ORDERING PROCEDURE

Alwayse provide a completely free technical advice service. We can help you select not only the most suitable ball unit for your application, we can advise on every aspect of layout, design, manufacture and maintenance of your installation.

We strongly recommend you take advantage of this service.

To Order

1) It is generally only necessary to quote the Product Reference Number (i.e. 1009, 1019 or 530-0) and the Material Type (i.e. Type 13, 14,15 or 16).

2) There are however instances where more information is required.

a) Where applicable the length of thread (dimension N) and the spring washer diameter (dimension W), see pages 6-7 & 10-11, also need to be indicated, e.g. 3001-13-25 and 3004-13-16.9.

b) Also, if applicable, quote the special specification code. For example,

NO (no oil)
NS (no seal)
NB (nylon ball)
PB (phenolic load ball)
DE (dirt exit hole)
SI (solid steel inner ring).

Black phenolic balls are available in Ø19mm and Ø25.4mm load balls only.

QUICK GUIDE TO THE PRODUCT RANGE

Pages 4,5
Flange Fixing Units

Pages 6,7
Thread Fixing Units

Pages 8,9
Tube Fixing·Clamp Fixing·Miscellaneous Units

Pages 10,11
Base Fixing Units

Pages 12,13
Mini ball transer units, ball stands, hangerbolts

Pages 14,15
Glide-Alwayse Units & Fixing Sockets

Pages 16,17
Euro Units

Pages 18,19
Heavy Duty Units, Series 800

Pages 20,21
Hi-Tech, Double Seal, Units

Pages 22,23
Hevi-Load Units 0,1,2 & 3

Pages 24,25
Hevi-Load Units 5,6 Die Lifters

Pages 26,27
Spring Loaded Units

Pages 28,29
TUFF Series Heavy Duty Units

Pages 30,31
Fixing Clips

Page 32
Tee Blocks, Die Tables

FLANGE FIXING UNITS

3016 - 4001

Features: General purpose. Low profile, dirt exit hole. No seals in 3016 and 3025 units.

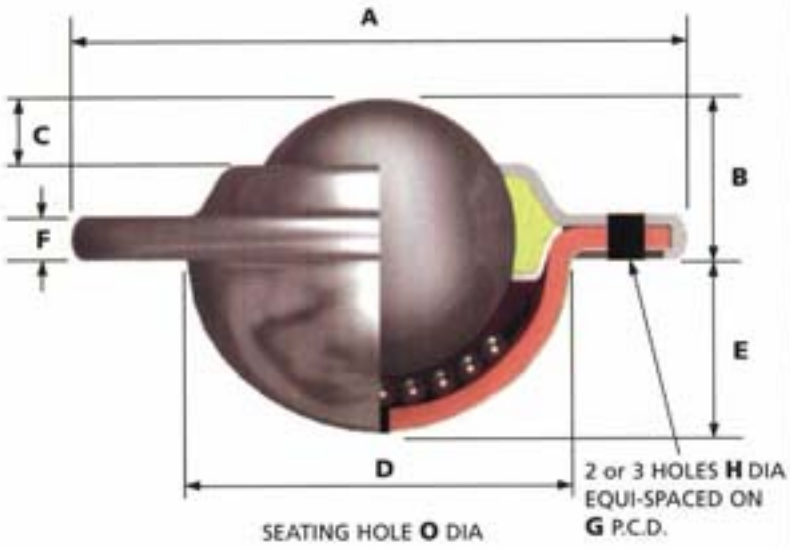

Ball unit Ref. No's 1022 and 1035 with solid steel inner ring (SI) option illustrated with no seal for improved protection from shock loading.

1502

Features: Low profile, high load capacity. Plastic knife edge seal on load ball. Dirt exit hole. Requires 5mm radius on fixing hole. See 'R'.

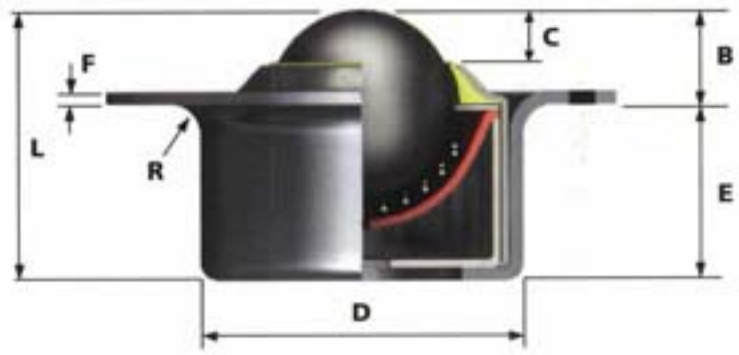

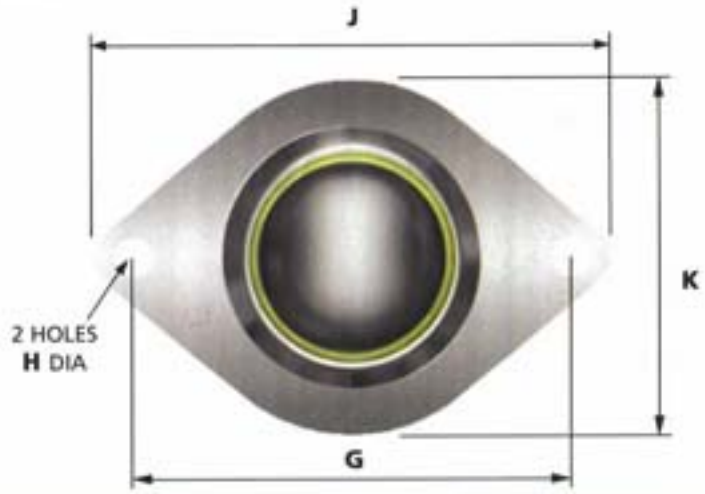

1010 / 1030

Features: Press ball unit into hole to fix, prise out to remove. Units can either be fixed or replaced quickly. Low profile, dirt exit hole.

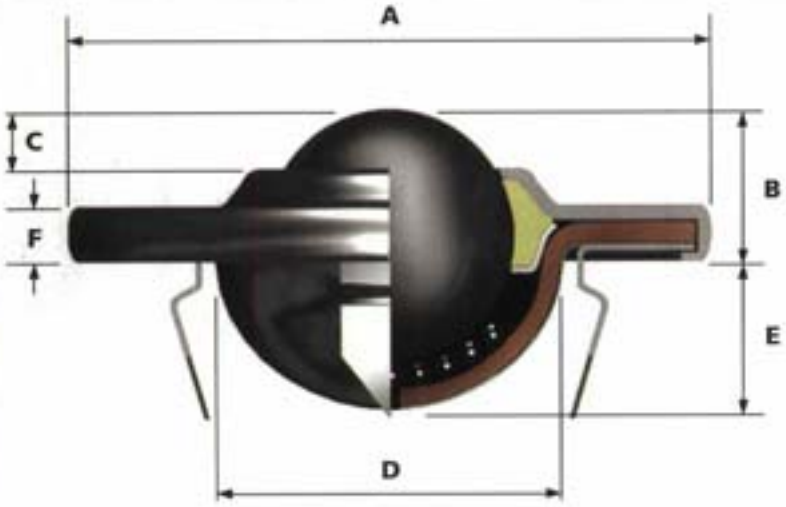

2002 XTRA - TUF

Features: Heavy duty construction, designed for arduous and dirty conditions. Flushing hole for cleaning, extra large dirt exit hole.

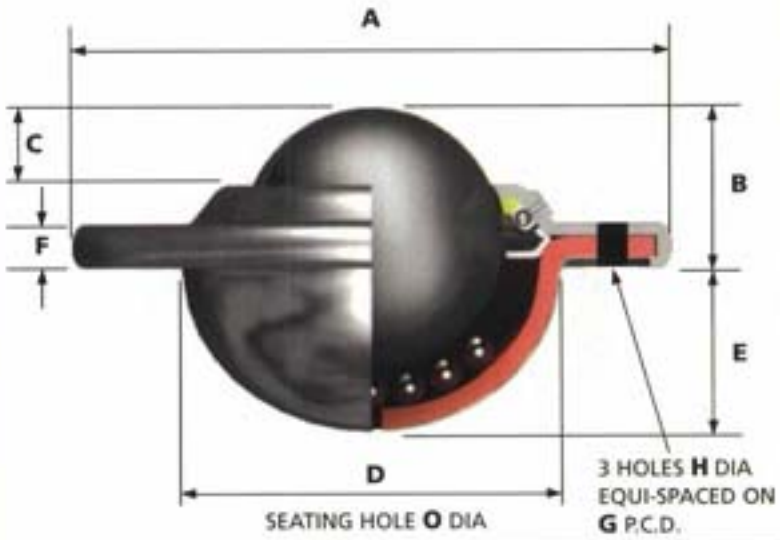

3 HOLES FOR HEAVY DUTY FIXING

 IMPORTANT - IF YOU ARE UNSURE, CONSULT OUR FREE TECHNICAL SERVICE. TELEPHONE: 0121 772 8481 FACSIMILE: 0121 771 0327

FLANGE FIXING UNITS

REF No.	FIXING HOLES	BALL SIZE (mm)	WEIGHT (KGS)	DIMENSIONS (mm) A Max Diameter	B Working Height of Ball	C Ball Exposure above Outer Ring	D Body Diameter	E Under Flange to Base	F Flange Thickness	G P.C.D. or Centres of Fixing Holes	H Hole Diameter of Fixing Holes	O Seating Hole Diameter	MAXIMUM DYNAMIC LOADING (kg) TYPE 13 Carbon Steel Bearings, Zinc Plated Pressings LOAD UP	TYPE 13 LOAD DOWN	TYPE 14 Nylon Load Bearing, Zinc Plated Pressings LOAD UP	TYPE 14 LOAD DOWN	TYPE 15 Stainless Steel Bearings and Pressings LOAD UP	TYPE 15 LOAD DOWN	TYPE 16 Stainless Steel Bearings, Zinc Plated Pressings LOAD UP	TYPE 16 LOAD DOWN
3016	2	15.8	0.045	41.3	10.2	4	22.2 ±0.2	8.3	3.2	30 ±0.2	3.5	23	12	6	8	4	12	6	12	6
3000	2	19	0.087	61	10	3.2	29.1 ±0.2	12	3.2	44.5 ±0.2	5.1	30	25	10	20	10	25	10	25	10
3006	3																			
3025	2	25.4	0.135	56	14.6	7.3	34.7 ±0.2	14.6	4	45.5 ±0.2	4.5	35.5	55	25	25	10	55	25	55	25
1000	2	25.4	0.175	73	14.2	6.3	37.2 ±0.2	15.8	3.5	55.6 ±0.2	5.1	38.1								
1008	3																			
1022	3	31.7	0.265	73.7	16.2	8	45.5 ±0.2	19.9	4.2	58.7 ±0.2		46.5	125	55	25	10	125	55	125	55
1035	2																			
32742	2	31.7	0.270	73.7	16.2	8	45.5 ±0.2	19.9	4.2	58.7 ±0.2	5.1	46.5								
32743	3																			
2000	2	39.7	0.515	89	21.4	8.7	55.6 ±0.2	24.6	6	70 ±0.2	7	56.5	140	60	N/A	N/A	140	60	140	60
2011	3																			
4001	3	50.8	1.065	120.7	28.3	14.3	75.3 ±0.2	30.2	6.3	92 ±0.2	8	76.5	340	100	N/A	N/A	250	100	340	100

The 32742 and 32743 ball units have 7 dirt exit holes for removal of dirt and debris and no seal

				DIMENSIONS (mm) B Working Height of Ball	C Ball Exposure above Outer Ring	D Body Diameter	E Under Flange to Base	F Flange Thickness	G P.C.D. or Centres of Fixing Holes	H Hole Diameter of Fixing Holes	J Major Flange Size	K Minor Flange Size	L Overall Height	R Radius Under Flange							
1502	2	25.4	0.196	12	6	42 ±0.2	24.5	1.7	58.7 ±0.2	5.1	68.1	50	36.5	5	100	50	25	10	100	50	100	50

				DIMENSIONS (mm) A Max Diameter	B Working Height of Ball	C Ball Exposure above Outer Ring	D Body Diameter	E Under Flange to Base	F Flange Thickness	G P.C.D. or Centres of Fixing Holes	H Hole Diameter of Fixing Holes	O Seating Hole Diameter	T Table Top Thickness							
1010	-	25.4	0.195	73	15.4	6.3	36.8 ±0.2	15	4.8	N/A	N/A	50	5	55	25	25	10	55	25	55	25
1030	-	31.7	0.275	73.7	17	8	44.6 ±0.2	19.5	5	N/A	N/A	50	5	125	55	25	10	125	55	125	55

				DIMENSIONS (mm) A Max Diameter	B Working Height of Ball	C Ball Exposure above Outer Ring	D Body Diameter	E Under Flange to Base	F Flange Thickness	G P.C.D. or Centres of Fixing Holes	H Hole Diameter of Fixing Holes	O Seating Hole Diameter								
2002	3	39.7	0.635	94.6	21.2	6.9	62 ±0.2	27.3	6.3	76.2 ±0.2	7	63.3	225	100	N/A	N/A	225	100	225	100

To order, specify REF N° and TYPE, i.e. 3016-13.

General Tolerance unless stated ±0.3mm

THREAD FIXING UNITS

3001

Features: Adjustable height, drilled hole fixing.
Optional extras: Additional nuts, alternative thread sizes, dirt exit hole.

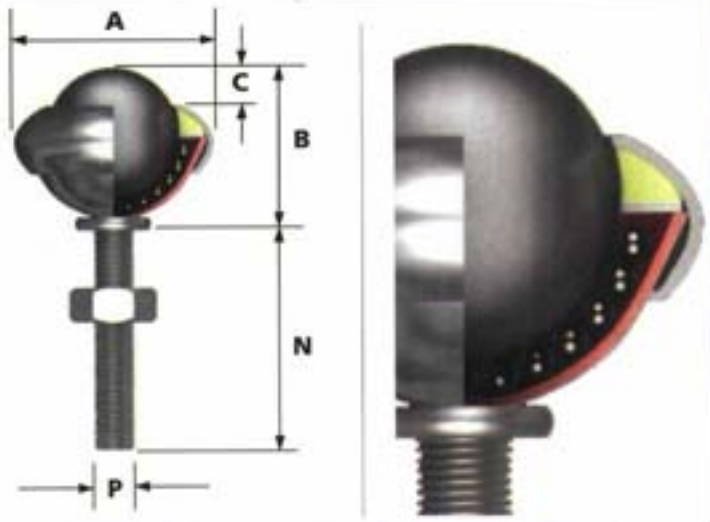

3002

Features: Large support area, greater stability, drilled hole fixing.
Optional extras: Alternative thread sizes, dirt exit hole.

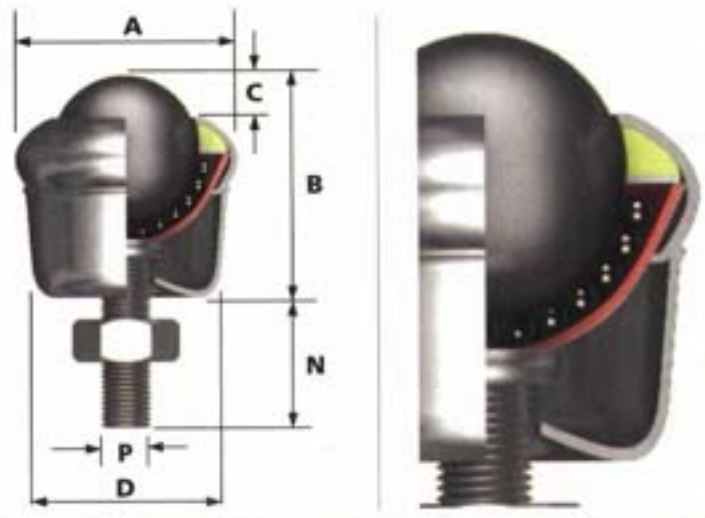

1003

Features: Large support area, greater stability, drilled hole fixing.
Optional extras: Alternative thread sizes, dirt exit hole.

1009

Features: Adjustable height, drilled hole fixing.
Optional extras: Additional nuts, alternative thread sizes, dirt exit hole.

1501

Features: Large support area, greater stability, drilled hole fixing. High load capacity, plastic knife edge seal on main ball.
Optional extras: Alternative thread sizes, dirt exit hole.

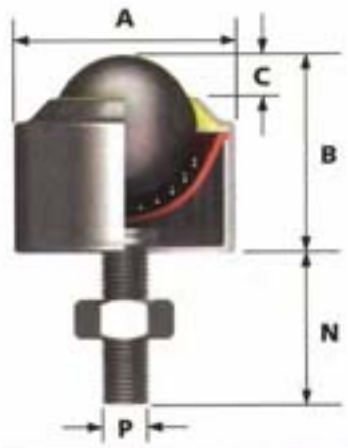

2001

Features: Adjustable height, drilled hole fixing.
Optional extras: Additional nuts, alternative thread sizes, dirt exit hole.

2005

Features: Large support area, greater stability, drilled hole fixing.
Optional extras: Alternative thread sizes, dirt exit hole.

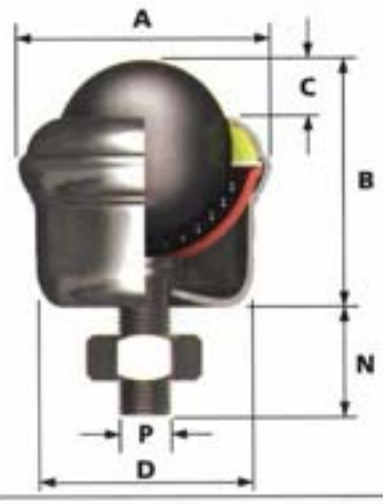

4004

Features: Adjustable height, drilled hole fixing. High load capacity, dirt exit hole. Can be dismantled for cleaning.
Optional extras: Grease points can be fitted. Alternative thread sizes.

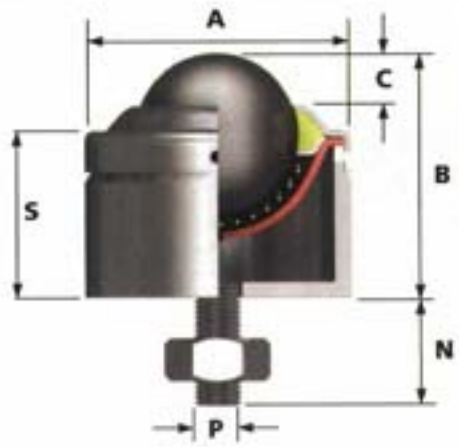

 IMPORTANT - IF YOU ARE UNSURE, CONSULT OUR FREE TECHNICAL SERVICE. TELEPHONE: 0121 772 8481 FACSIMILE: 0121 771 0327

REF No.	BALL SIZE (mm)	MAX TORQUE on NUT (Nm)	WEIGHT (KGS)	DIMENSIONS (mm) A Max Diameter	B Working Height of Ball	C Ball Exposure above Outer Ring	D Body Diameter	N Length of Thread	P Thread Sizes	MAXIMUM DYNAMIC LOADING (kg) TYPE 13 Carbon Steel Bearings, Zinc Plated Pressings LOAD UP	TYPE 13 LOAD DOWN	TYPE 14 Nylon Load Bearing, Zinc Plated Pressings LOAD UP	TYPE 14 LOAD DOWN	TYPE 15 Stainless Steel Bearings and Pressings LOAD UP	TYPE 15 LOAD DOWN	TYPE 16 Stainless Steel Bearings, Zinc Plated Pressings LOAD UP	TYPE 16 LOAD DOWN
3001	19	15	0.060	32.1	24.6	4.7	-	25 30 35 40 50	M8	25	10	20	10	25	10	25	10
3002			0.080		30.2		25.4	18 23 28 33 43									

Ball units are also available with black phenolic load balls (see page 3 suffix PB) of ∅19mm and ∅25.4mm. Ball transfer units assembled with a black phenolic load ball can be used for glass handling applications.

1003	25.4	15	0.160	39.7	39.7	6.3	25.4	18 23 28 33 43	M8	55	25	25	10	55	25	55	25
1009			0.140		32.5		-	25 30 35 40 50									
1501			0.180	39.5	35.8	6.1	-	18 23 28		100	50	25	5	100	50	100	50

*Pattern 4004 can be supplied with other screw sizes or plain shanks.

REF No.	BALL SIZE (mm)	MAX TORQUE on NUT (Nm)	WEIGHT (KGS)	DIMENSIONS (mm) A Max Diameter	B Working Height of Ball	C Ball Exposure above Outer Ring	D Body Diameter	N Length of Thread	P* Thread sizes	S Base to top of body	MAXIMUM DYNAMIC LOADING (kg) TYPE 13 Carbon Steel Bearings, Zinc Plated Pressings LOAD UP	TYPE 13 LOAD DOWN	TYPE 14 Nylon Load Bearing, Zinc Plated Pressings LOAD UP	TYPE 14 LOAD DOWN	TYPE 15 Stainless Steel Bearings and Pressings LOAD UP	TYPE 15 LOAD DOWN	TYPE 16 Stainless Steel Bearings, Zinc Plated Pressings LOAD UP	TYPE 16 LOAD DOWN
2001	39.7	20	0.400	55.5	47.62	11.9	-	25 30 40 50	M10	-	140	60	N/A	N/A	140	60	140	60
2005			0.460	55.5	54.8		49	22 32 42										
4004	50.8	25	1.720	89	76	22.2	-	UPTO 75	5/8" Whit M16	53.8	340	100	N/A	N/A	250	100	340	100

To order, specify REF N°, TYPE and LENGTH OF THREAD, i.e. 3001-13-25.

General Tolerance unless stated ±0.3mm

3004 • 1002 TUBE FIXING

Features: Tube fixing is achieved by pushing the spring washer into a suitable size tube and turning to lock. 3 sizes available - see dimension 'W'. Suitable for use as a castor.

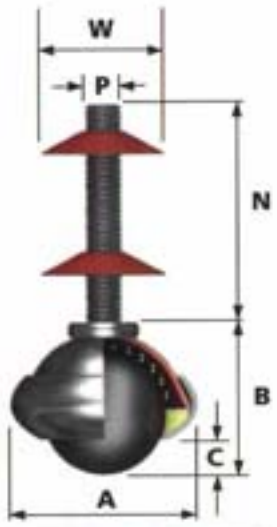

Note: The sectioned tube is not part of the ball unit.

2004 TUBE FIXING

Features: Tube fixing is achieved by pushing the bush into the tube. Rotating the unit expands the rubber bush for an interference fit. Excellent as a castor.

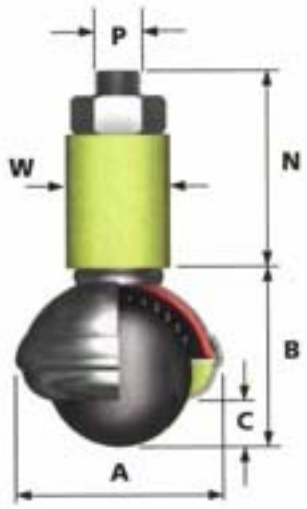

3007 • 1001 • 1021 CLAMP FIXING

Features: The 3007 and 1001 can be fixed to 1mm-10mm thick materials. 1mm-27mm thick materials for the 1021.
The maximum tightening torque is 15Nm for the 3007 and 1001, 20Nm for the 1021.
Optional extras: Dirt exit hole.

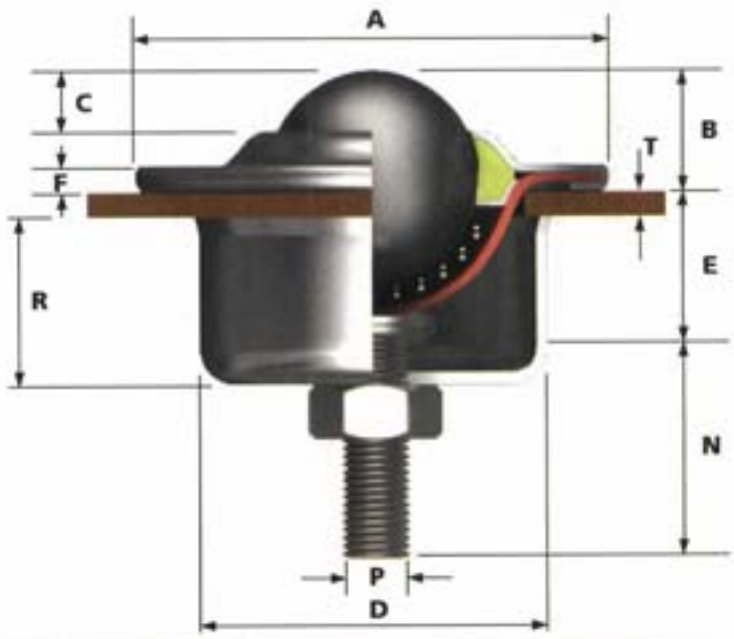

1004

Features: Supplied with circlip for loosely fixing to materials up to 6.4mm thick. Dirt exit hole.

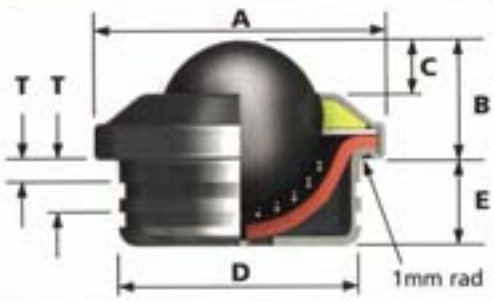

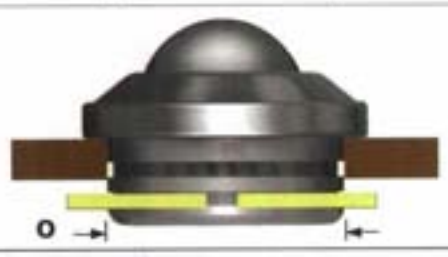

1007

Features: Small taper on body allows for interference fixing. Do not strike the ball, use a tube on the flange diameter when fixing. Approx size of taper is 35.8mm top and 35.4mm bottom. Dirt exit hole.

1500

Features: High load capacity.
Improved plastic knife edge seal wipes debris off outside the ball. Dirt exit hole.

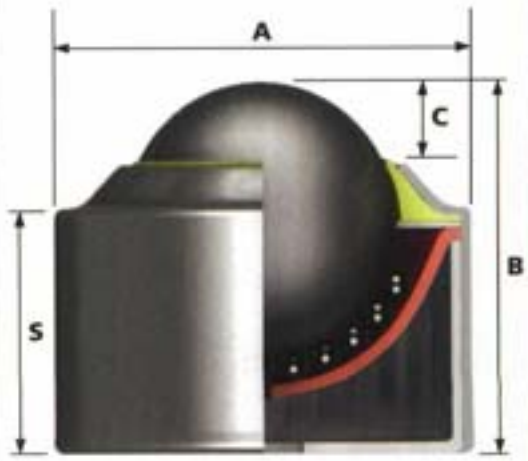

REF No.	BALL SIZE (mm)	WEIGHT (KGS)	DIMENSIONS (mm) A Maximum Diameter	B Working Height of Ball	C Ball Exposure above Outer Ring	N Length of Thread	P Thread Size	W Spring Washer Diameter	MAXIMUM DYNAMIC LOADING (kg) TYPE 13 Carbon Steel Bearings, Zinc Plated Pressings LOAD UP	LOAD DOWN	TYPE 14 Nylon Load Bearing, Zinc Plated Pressings LOAD UP	LOAD DOWN	TYPE 15 Stainless Steel Bearings and Pressings LOAD UP	LOAD DOWN	TYPE 16 Stainless Steel Bearings, Zinc Plated Pressings LOAD UP	LOAD DOWN
3004	19	0.060	32.1	24.6	4.7	40	M6	16.9 20.2 23.5	25	10	20	10	25	10	25	10
1002	25.4	0.120	39.7	32.5	6.3				55	25	25	10	55	25	55	25
2004	39.7	0.420	55.5	47.6	11.9	50	M10	Grip Range 25.4 to 32	140	60	N/A	N/A	140	60	140	60

To order, specify REF N°, TYPE and SPRING WASHER DIAMETER, i.e. 3004-13-16.9.

			DIMENSIONS (mm) A Maximum Diameter	B Working Height of Ball	C Ball Exposure above Outer Ring	D Body Diameter	E Distance Under Flange to Base	F Flange Thickness	N Length of Thread	O Fixing Hole Diameter	P Thread Size	R Body Depth	T Table Top Thickness							
3007	19	0.160	61	10	3.2	49.7	14.5	3.2	50	30	M8	25	1 to 10	25	10	20	10	25	10	25	10
1001	25.4	0.260	73	14.2	6.3		18	3		38.1				55	25	25	10	55	25	55	25
1021	31.7	0.360	73.7	16.2	8		22.3	4.2		46.5	M10		1 to 27	125	55	25	10	125	55	125	55

			DIMENSIONS (mm) A Maximum Diameter	B Working Height of Ball	C Ball Exposure above Outer Ring	D Body Diameter	E Distance Under Flange to Base	O Fixing Hole Diameter	S Base to Top of Body	T Table Top Thickness								
1004	25.4	0.140	45.2	18.4	7.9	34.9	12.7	36	-	3.2 6.4	55	25	25	10	55	25	55	25
1007	25.4					35.8	11.9	To suit	-	-	55	25	25	10	55	25	55	25
1500	25.4	0.160	39.5	35.8	6.1	-	-	To suit	22.8	-	100	50	25	10	100	50	100	50

To order, specify REF N° and TYPE, i.e. 3007-13.

General Tolerance unless stated ±0.3mm

BASE FIXING UNITS

3005

Features: Heavy duty fixing. High profile. Drill hole fixing.
Optional extras: Dirt exit hole.

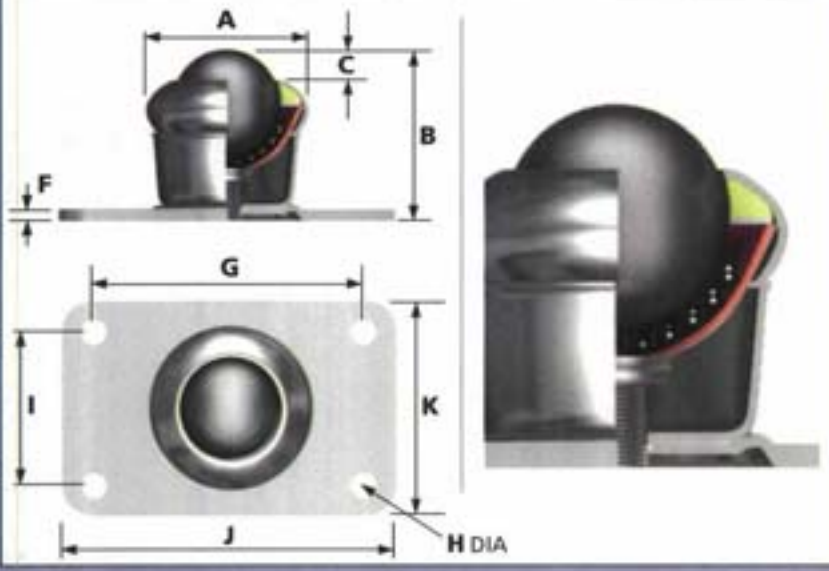

1005

Features: Heavy duty fixing. High profile. Drill hole fixing.
Optional extras: Dirt exit hole.

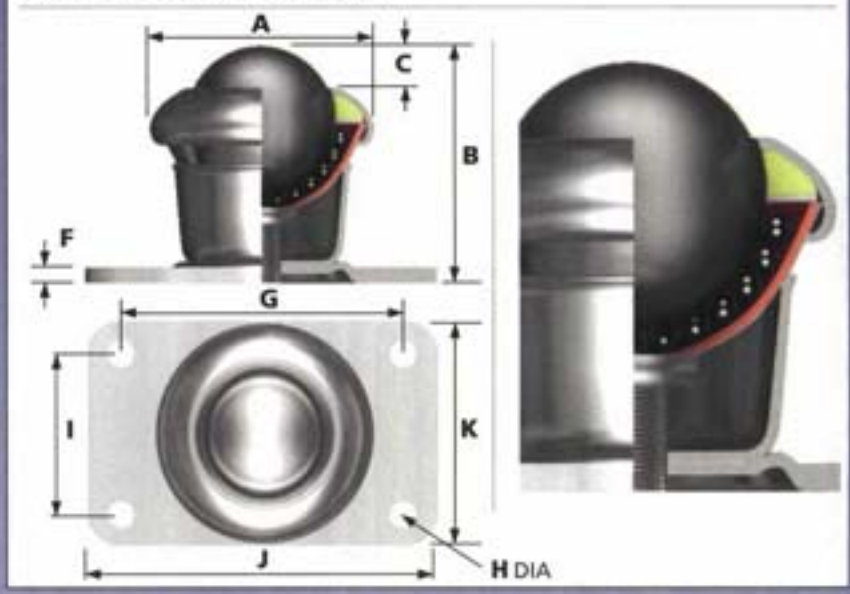

1020

Features: Heavy duty fixing. High load capacity. High profile. Drill hole fixing.
Optional extras: Dirt exit hole.

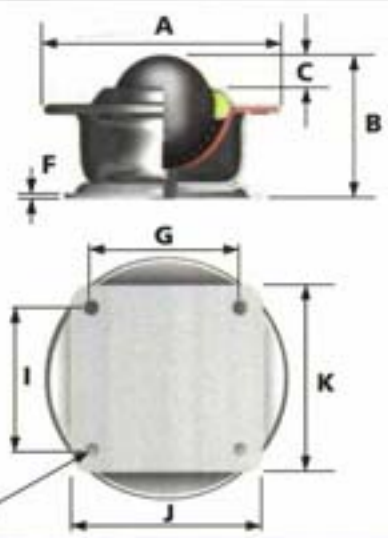

2003

Features: Heavy duty fixing. High load capacity. High profile. Drill hole fixing.
Optional extras: Dirt exit hole.

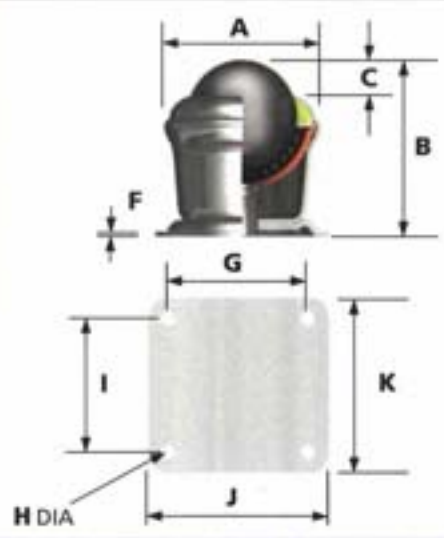

4002

Features: Heavy duty fixing. High load capacity. High profile. Dirt exit hole standard. Drill hole fixing. Can be dismantled for cleaning.
Optional extras: Grease points can be fitted.

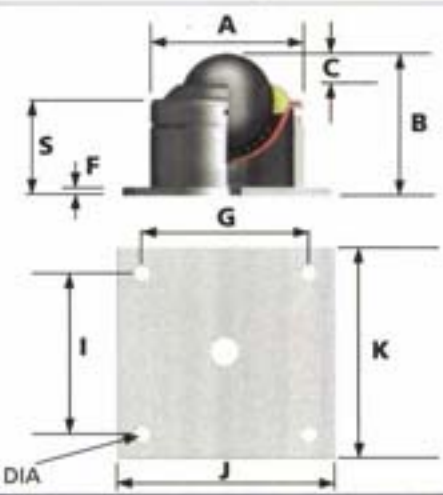

1006

Features: High load capacity. High profile. Dirt exit hole standard. Drill hole fixing. The 1041 and 1050 ball units are similar in design to the 1006 ball unit.

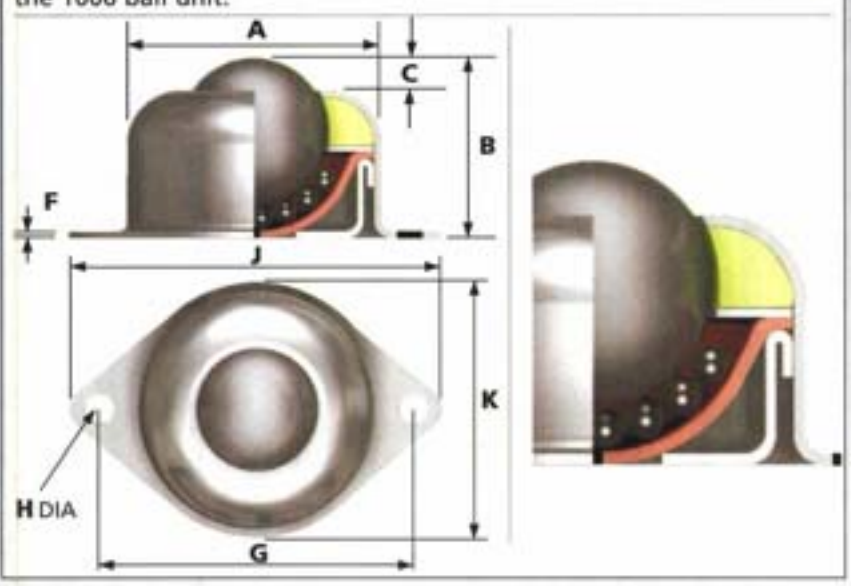

1503

Features: High load capacity. High profile. Dirt exit hole standard. Drill hole fixing. Plastic knife edge seal on main ball.

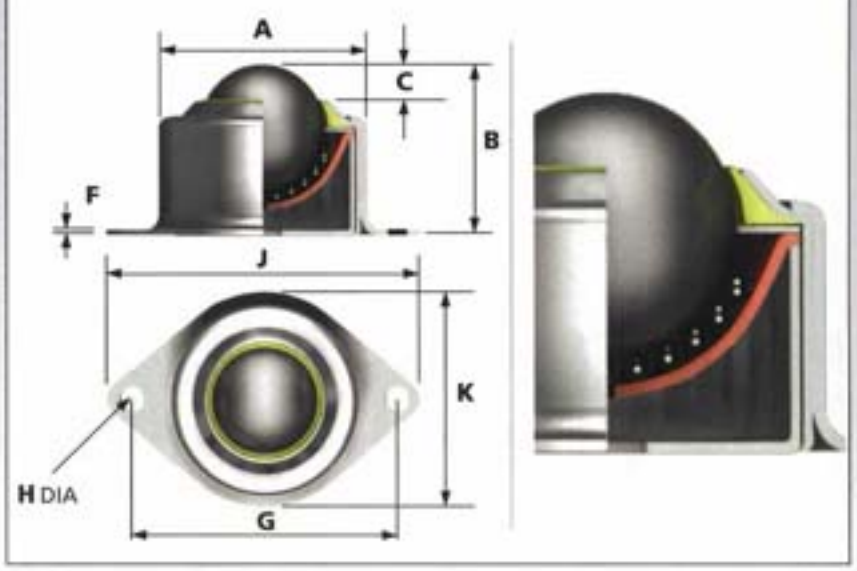

BASE FIXING UNITS

REF No.	BALL SIZE (mm)	FIXING HOLES (No. of holes)	WEIGHT (KGS)	DIMENSIONS (mm) A Max Diameter	B Working Height of Ball	C Ball Exposure above Outer Ring	F Base Thickness	G Hole Centres (Length)	H Hole Diameter of Fixing Holes	I Hole Centres (Width)	J Base Plate (Length)	K Base Plate (Width)	S Base to Top of Body	MAXIMUM DYNAMIC LOADING (kg) TYPE 13 Carbon Steel Bearings, Zinc Plated Pressings LOAD UP	TYPE 13 LOAD DOWN	TYPE 14 Nylon Load Bearing, Zinc Plated Pressings LOAD UP	TYPE 14 LOAD DOWN	TYPE 15 Stainless Steel Bearings and Pressings LOAD UP	TYPE 15 LOAD DOWN	TYPE 16 Stainless Steel Bearings, Zinc Plated Pressings LOAD UP	TYPE 16 LOAD DOWN
3005	19	4	0.100	32.1	32.5	4.7	2.0	49.2 ±0.2	6.3	25.4 ±0.2	65	38	-	25	10	20	10	25	10	25	10
1005	25.4	4	0.160	39.7	41.3	6.3	2.0	49.2 ±0.2	6.3	25.4 ±0.2	65	38	-	55	25	25	10	55	25	55	25
1020	31.7	4	0.380	73	44.4	8	2.0	47.6 ±0.2	4.8	47.6 ±0.2	58.7	58.7	-	125	55	25	10	125	55	125	55
2003	39.7	4	0.480	55.5	57	11.9	2.0	47.6 ±0.2	4.8	47.6 ±0.2	58.7	58.7	-	140	60	N/A	N/A	140	60	140	60
4002	50.8	4	2.100	89	76	14.3	6.3	89 ±0.2	13.5	89 ±0.2	127	127	54	340	100	N/A	N/A	250	100	340	100
1041	15.8	2	0.042	27.5	20.0	4.0	0.9	40.0 ±0.2	5.2	-	50.0	35.0	-	20	10	10	5	20	10	20	10
1006	25.4	2	0.160	44.5	30.5	6.3	1.0	60.3 ±0.2	5.0	-	69.0	51.0	-	55	25	25	10	55	25	55	25
1050	25.4	2	0.145	42.0	31.0	7.5	1.0	56.0 ±0.2	5.5	-	69.0	51.0	-	30	10	20	10	30	10	30	10
1503	25.4	2	0.200	42	35.8	6.1	1.75	58.7 ±0.2	5.0	-	69.0	51.0	-	100	50	25	10	100	50	100	50

To order, specify REF N° and TYPE, i.e. 3005-13.

General Tolerance unless stated ±0.3mm

MINI BALL TRANSFER UNITS

REF No	Ball Size (mm)	C	A	N	L	B	P	Weight (Kg)	Dynamic Load Up Rating (Kg)
11MI-05-17	4.8	1.0	8.0	2.5	8.5	6.0	M2	0.003	5
11MI-05-15			12.0	15.0	24.0	9.0	M6	0.01	8
11MI-06-17	6.4	2.0	13.0	6.0	16.5	10.5	M3	0.011	10
11MI-06-15		2.0	15.0	15.0	26.0	11.0	M6	0.02	10
11MI-08-17	7.9	2.0	15.0	8.0	20.5	12.5	M4	0.021	15
11MI-08-15			15.0	18.0	32.0	14.0	M8	0.03	15
11MI-10-15	9.6	2.0	19.0	20.0	40.0	20.0	M8	0.06	20
11MI-13-15	12.7	3.5	22.0	23.0	48.0	25.0	M8	0.10	25
11MI-16-15	15.8	4.0	24.0	12.0	32.5	20.5	M6	0.05	30
11MI-16-13	15.8	4.0	24.0	12.0	32.5	20.5	M6	0.05	35

Applications

Measuring Equipment

Lightweight Coilholder

Guides for small linear motion (eg photo copier slides)

Transfer of material in clean rooms

Miniature mechanisms

Type 15

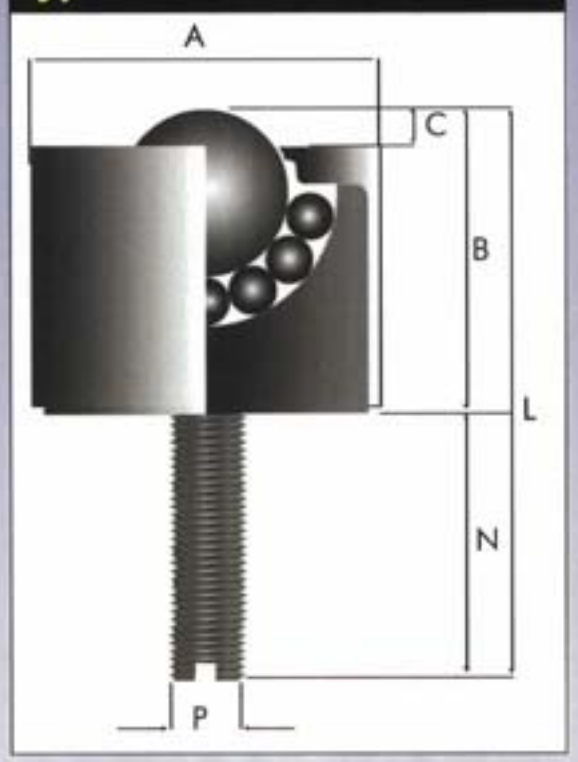

Type 17

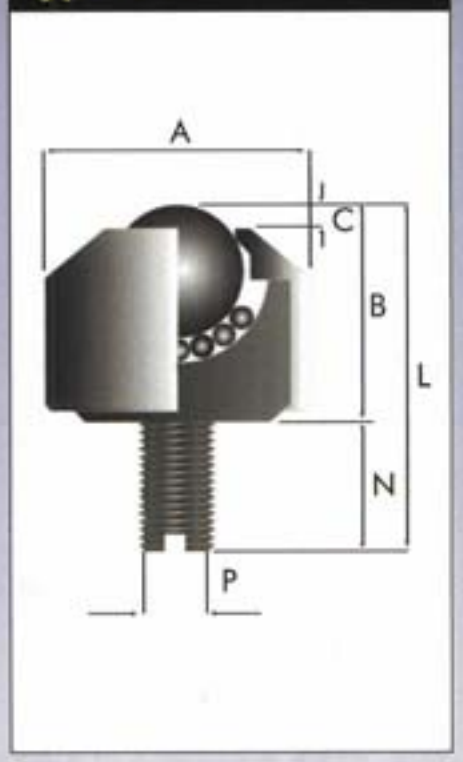

Type 15 denotes stainless steel balls and housing
Type 17 denotes stainless steel balls and housing with angled top.
The screw thread and body are integral and machined from solid steel.

BALL TRANSFER STANDS

Allow the movement of heavy materials and large fabrications. Typical applications include the handling of plate or sheet-steel for guillotine or press brake machines.

Two types of stand are available, both made from heavy duty mild steel tube.

Overall height can vary to suit the application and can be adjusted to ±38mm.

Stands need to be positioned at not less than 60cm centres to enable an operator to pass in-between them and to move close to machinery in safety.

NOTE - posts should be fitted where there is the possibility of loads rolling off.
Minimum load dimension should not be less than the pitch of 4 stands.

Detach posts are available as an option.

BALL TRANSFER STANDS

11/4"(32mm) size:
23/8"(60mm) outside diameter x 2"(50mm) inside diameter. Thread 11/2" B.S.P. Available in any height, 680mm is typical. Adjustment ±38mm. Capacity 250Kg.

2"(50mm) size:
3"(76mm) outside diameter x 21/2"(64mm) inside diameter. Thread 21/2" B.S.P. Available in any height, 680mm is typical. Adjustment ±38mm. Capacity 340Kg.

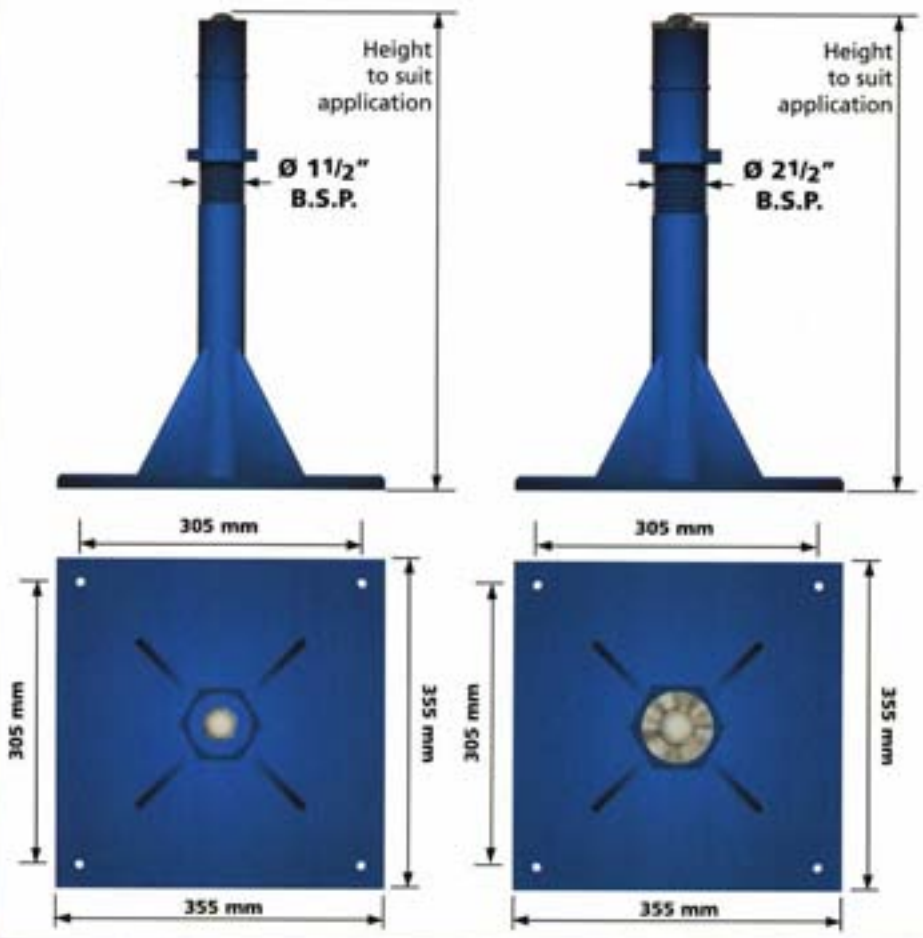

HANGER BOLTS

Ideal for the easy movement of large wall panels or sliding doors.

Ball units (ref N° 515-0, see pages 16 & 17) are secured into a circular plate with a central bolt, ideal for overhead suspension using most types of existing track. Multi-directional, they will negotiate tight curves and even right-angles with ease.

Hanger bolts can be supplied complete or self-assembly and can be produced to suit any specific application.

HANGER BOLTS

Standard hangerbolt: M16 x 85mm thread length with two spanner flats for easy attachment and vertical adjustment.
Finish, zinc plated or stainless steel.
Standard ball units: Six 515-0-13 at 60Kg load capacity with retaining clip.

GLIDE-ALWAYSE UNITS & FIXING SOCKETS

This is a simple and inexpensive range of ball transfer units which have a large ball exposure. They are ideal for lighter duties and where there is a cost consideration.

All units are fitted with a seal which simply and effectively removes debris by an internal plastic scraper.

The direction of rotation slightly moves the ball against the seal providing a highly effective cleaning action.

For normal applications steel bearings with zinc plated pressings and components are recommended. However, when used as a castor or in wet conditions stainless steel (Type 15) is recommended.

1700 PLUG FIXING

Features: Plain body, dirt exit hole standard.

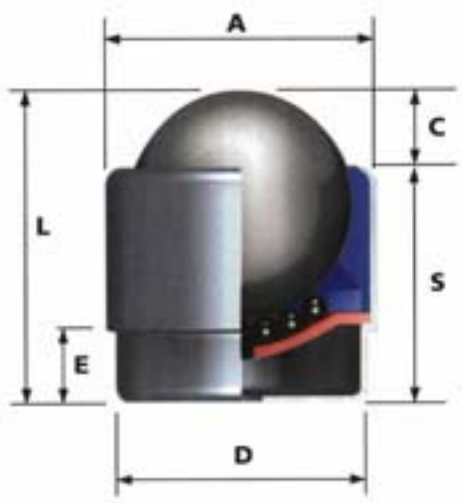

1701 BOLT FIXING

Features: Drill hole nut and bolt fixing. Maximum tightening torque is 15Nm.

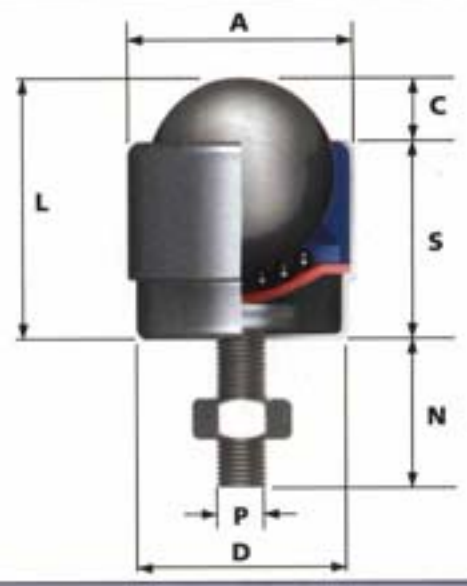

1702 FLANGE FIXING

Features: Low profile flange fixing, dirt exit hole standard.

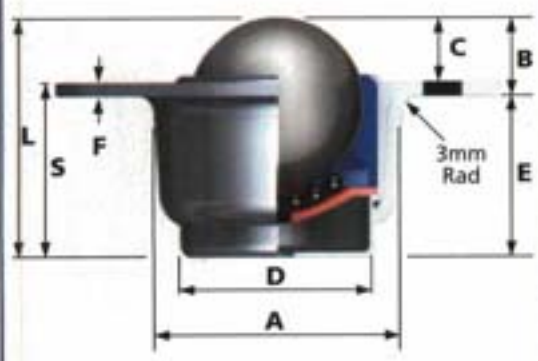

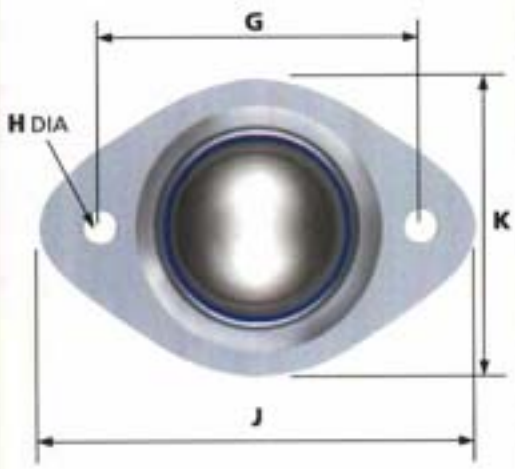

1703 PLATE FIXING

Features: High profile base plate fixing. Drill hole fixing. Dirt exit hole standard.

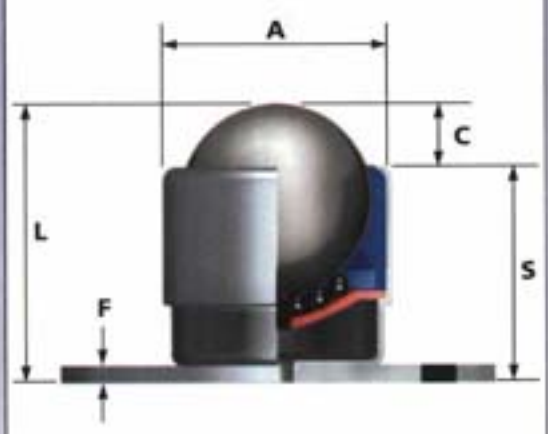

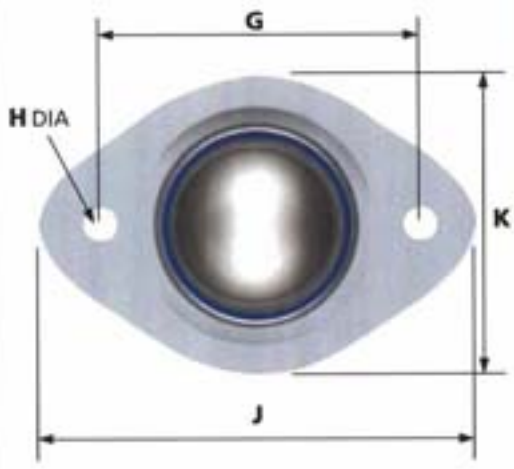

1709 GRIP NECK FIXING

Features: Plastic or steel socket fixing.

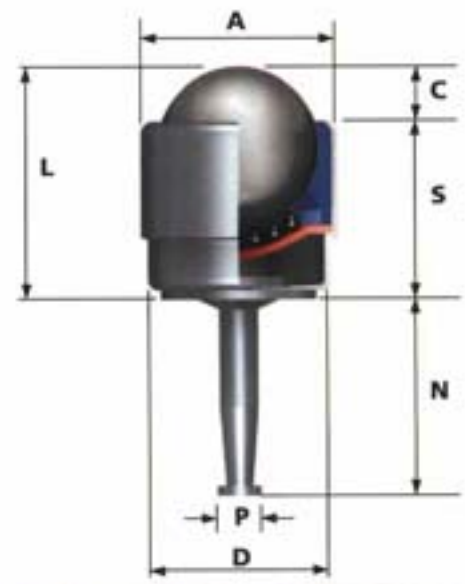

REF No.	FIXING	BALL SIZE (mm)	WEIGHT (kg)	DIMENSIONS (mm)															MAXIMUM DYNAMIC LOADING (kg)			
				A Maximum Diameter	B Working Height of Ball	C Ball Exposure above Outer Ring	D Body Diameter	E Distance Under Flange to Base	F Flange Thickness	G P.C.D. or Centres of Fixing Holes	H Hole Diameter of Fixing Holes	J Major Flange Size	K Minor Flange Size	L Overall Height	N Length of Thread or Pin	P Thread Size or Pin Diameter	S Base to Top of Body	TYPE 13 Carbon Steel Bearings, Zinc Plated Pressings	TYPE 14 Nylon Load Bearing, Zinc Plated Pressings	TYPE 15 Stainless Steel Bearings & Pressings	TYPE 16 Stainless Steel Bearings, Zinc Plated Pressings
1700	PLUG	25.4	0.10	30.5	-	8.8	26.6	7.8	-	-	-	-	-	33.5	-	-	24.7	50	20	50	50
1701	BOLT		0.12		-			-							18 23 28	M8					
1702	FLANGE			34.5	12.4			21.1	2	48 ±0.2	5.25	64	44		-	-	23.1				
1703	PLATE			30.5	-		-	-	2					35.7			26.9				
1709	GRIP NECK						26.6		-	-	-	-	-	34.7	34.7	7.7	25.9				

To order, specify REF N° and TYPE, i.e. 1700-13.

General Tolerance unless stated ±0.3mm

FIXING SOCKETS FOR GLIDE-ALWAYSE 1704 & 1709

REF No	FOR GLIDE-ALWAYSE UNIT	TYPE		DESCRIPTION
1705	1709	GRIP NECK		**TOOTHED STEEL SOCKET WITH 19mm HEAD DIAMETER** For 9.5mm x 35mm drilled hole. **APPLICATION: WOOD**
1707	1709	ROUND PLASTIC, SPLINED		**ROUND, PLASTIC, SPLINED SOCKET** Two sizes available i.e: O/D tube 15.8mm x 1.2mm wall and O/D tube 19.0mm x either 1.2 upto 1.6 wall thickness. **APPLICATION: ROUND SECTION TUBE**
1708	1709	SQUARE PLASTIC, SPLINED		**SQUARE, PLASTIC, SPLINED SOCKET** Two sizes available i.e: 19mm outside A/F square tube x 1.2mm upto 1.6mm wall and 25.4mm outside A/F square tube x 1.2mm upto 1.6mm wall thickness. **APPLICATION: SQUARE SECTION TUBE**

To order, specify REF N°, i.e. 1705.

EURO UNITS

Alwayse Euro Units have a main bearing cup of special toughened steel with a dirt exit hole and a woollen felt seal.

Min. -30°c to max. +70°c continuous, or +100°c intermittent. Special seals may need to be fitted to suit extreme conditions. In clean conditions and without seals +150°c to +200°c are possible, using Type 15 units at reduced loads.

MATERIAL SPEC:

Stainless Steel Pressings	AISI 304
Stainless Steel Balls	AISI 420
Nylon Balls	NYLON 66

EURO O

Features: Various fixing clips available, dimensionally compatible with the 800 series, see pages 18 & 19.

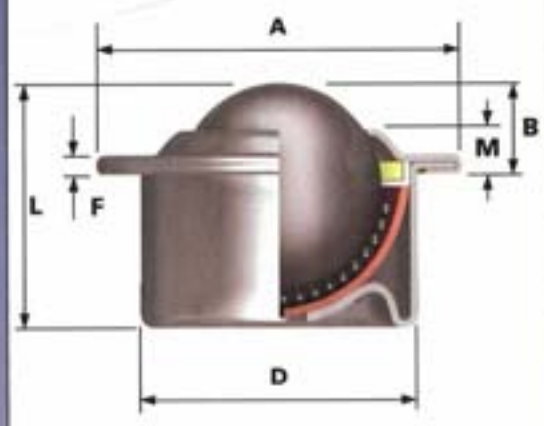

EURO 1

Features: Pop rivet or screw fixing.

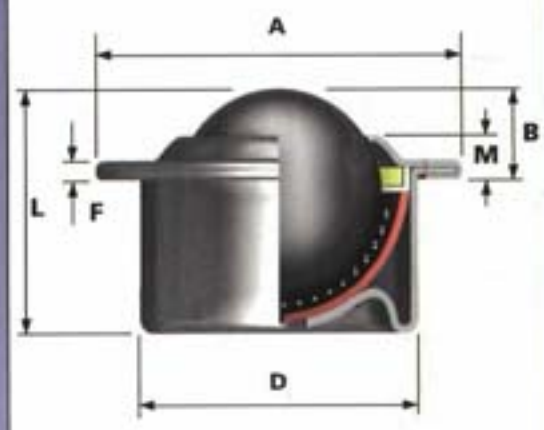

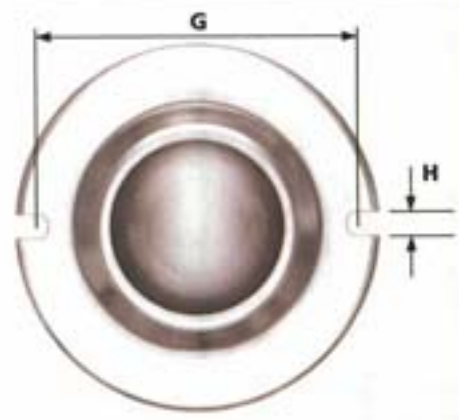

EURO 2

Features: Easy fitting with a 3 prong built-in clip from top face of ball table, compact and low profile, dimensionally identical to other Euro Unit ball units

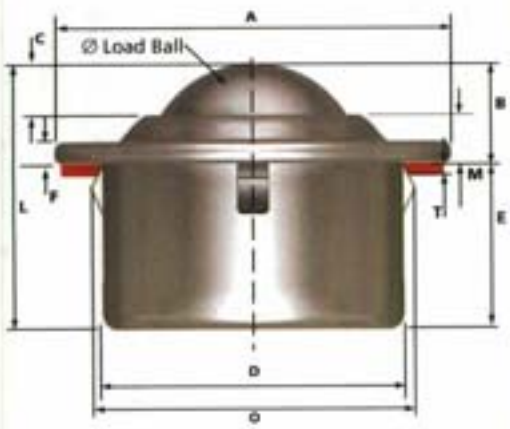

EURO 4

Features: Various fixing clips available, coned outer ring. Dimensionally compatible with the 800 series, see pages 18 & 19.

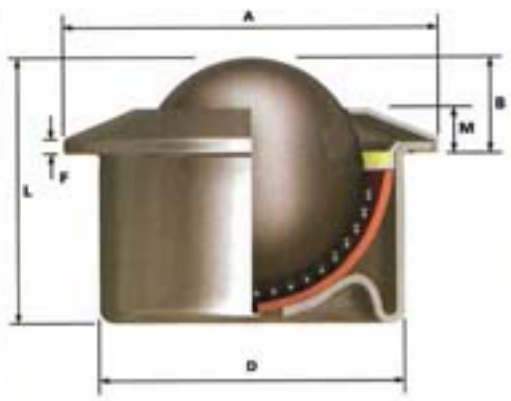

EURO 6

Features: Various fixing clips available. Reinforced coned outer ring and support cup for improved protection against shock loading. Dimensionally compatible with the 800 series. Woollen felt seals are standard except for the 515-6 ball unit.

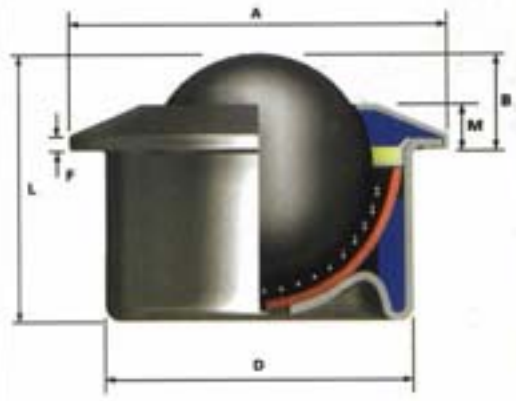

EURO UNITS

REF No.	BALL SIZE (mm)	DIMENSIONS (mm) A Maximum Diameter	B Working Height of Ball	D Body Diameter	F Flange Thickness	G P.C.D. or Centres of Fixing Slots	H Hole Diameter of Fixing Slots	M Under Flange to Top of Outer Ring	L Overall Height	MAXIMUM DYNAMIC LOADING (kg) TYPE 13 Carbon Steel Bearings, Zinc Plated Pressings WEIGHT (KGS)	TYPE 13 CAPACITY (kg)	TYPE 14 Nylon Load Bearing, Zinc Plated Pressings WEIGHT (KGS)	TYPE 14 CAPACITY (kg)	TYPE 15 Stainless Steel Bearings and Pressings WEIGHT (KGS)	TYPE 15 CAPACITY (kg)	TYPE 16 Stainless Steel Bearings, Zinc Plated Pressings WEIGHT (KGS)	TYPE 16 CAPACITY (kg)
515-0	15.8	31	9.5 ±0.2	24 ±0.065	2.8	-	-	6.3	21	0.043	60	0.028	10	0.043	38	0.043	60
515-1						29 ±0.2	3.5			0.043	60	0.028	10	0.043	38	0.043	60
515-4						-	-			0.043	60	0.028	10	0.043	38	0.043	60
515-6						-	-			0.054	60	0.039	10	0.054	38	0.054	60
522-0	22.2	45	9.8 ±0.2	36 ±0.08	2.8	-	-	5.5	30	0.132	160	0.096	20	0.132	100	0.132	160
522-1						42 ±0.2	3.5			0.132	160	0.096	20	0.132	100	0.132	160
522-4						-	-			0.132	160	0.096	20	0.132	100	0.132	160
522-6						-	-			0.165	160	0.130	20	0.165	100	0.165	160
530-0	30	55	13.8 ±0.3	45 ±0.08	4	-	-	8.3	37	0.278	300	0.182	25	0.278	200	0.278	300
530-1						51 ±0.2	3.5			0.278	300	0.182	25	0.278	200	0.278	300
530-4						-	-			0.278	300	0.182	25	0.278	200	0.278	300
530-6						-	-	8		0.335	300	0.238	25	0.335	200	0.335	300
545-0	44.5	75	19 ±0.4	62 ±0.095	4	-	-	10	53.5	0.725	610	-	-	0.725	250	0.725	610
545-1						69 ±0.2	4.3			0.725	610	-	-	0.725	250	0.725	610
545-4						-	-			0.725	610	-	-	0.725	250	0.725	610
545-6						-	-			0.887	610	-	-	0.887	250	0.887	610

REF No.	LOAD BALL SIZE (mm)	DIMENSIONS (mm) A Maximum Diameter (mm)	B Working Height of Ball (mm)	C Ball Exposure (mm)	D Body Diameter (mm)	E Distance from under Flange to Base (mm)	F Flange Thickness (mm)	M Under Flange to top of Outer Ring (mm)	L Overall Length (mm)	O Seating Hole Diameter (mm)	T Table Top Material Thickness (mm)	MAXIMUM DYNAMIC LOADING (kg) TYPE 13 Carbon Steel Bearings, Zinc Plated Pressings WEIGHT (KGS)	TYPE 13 CAPACITY (kg)	TYPE 14 Nylon Load Bearing, Zinc Plated Pressings WEIGHT (KGS)	TYPE 14 CAPACITY (kg)	TYPE 15 Stainless Steel Bearings and Pressings WEIGHT (KGS)	TYPE 15 CAPACITY (kg)	TYPE 16 Stainless Steel Bearings, Zinc Plated Pressings WEIGHT (KGS)	TYPE 16 CAPACITY (kg)
515-2	15.8	31	9.5 ±0.2	3.2	24 ±0.1	11.5	2.8	6.3	21	25.0 25.5	2	0.043	60	0.028	10	0.043	38	0.043	60
522-2	22.2	45	9.8 ±0.2	4.3	36 ±0.1	20.2	2.8	5.5	30	37.0 37.5	3	0.132	160	0.096	20	0.132	100	0.132	160
530-2	30	55	13.8 ±0.2	5.5	45 ±0.1	23.2	4-	8.3	37	46.0 46.5	6	0.278	300	0.182	25	0.278	200	0.278	300
545-2	44.5	75	19 ±0.2	9	62 ±0.1	34.5	4-	10	53.5	63.0 63.5	7	0.725	610	-	-	0.725	250	0.725	610

To order, specify REF N° and TYPE, i.e 515-0-13.

For load down use as a castor, reduce dynamic load rating by 50%.

CL14 FIXING CLIPS

(Please see pages 30 and 31 for CL14 fixing clip dimensions)

REF No.	SUITABLE FOR UNITS	FIXING HOLE SIZES (mm)	
CL14-515	515-0, 515-4, 515-6	24	+1.0 +1.5
CL14-522	522-0, 522-4, 522-6	36	+1.0 +1.5
CL14-530	530-0, 530-4, 530-6	45	+1.0 +1.5
CL14-545	545-0, 545-4, 545-6	62	+1.0 +1.5

To order, specify REF N°, i.e CL14-515.

General Tolerance unless stated ±0.3mm

HEAVY-DUTY UNITS, SERIES 800

HEAVY DUTY 800

Features: High load capacity, low profile, robust construction.

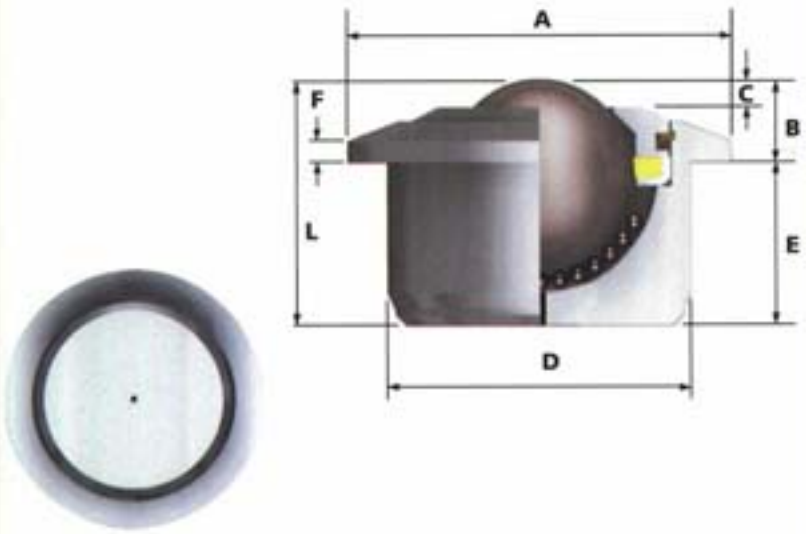

HEAVY DUTY 805

Features: High load capacity, low profile, robust construction. Multi-hole drain plug provides an extra 600% debris hole area to assist in cleaning.

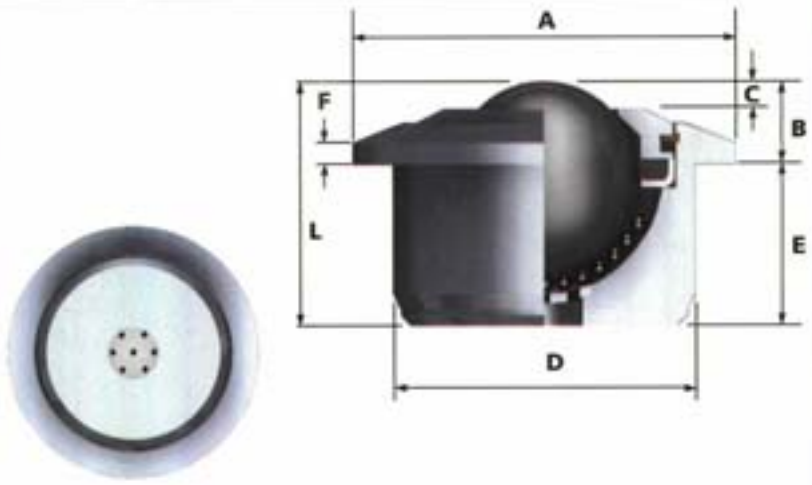

HEAVY DUTY 806

Features: High load capacity, low profile, can be disassembled. Slotted dirt exit hole allows large debris particles to pass through.

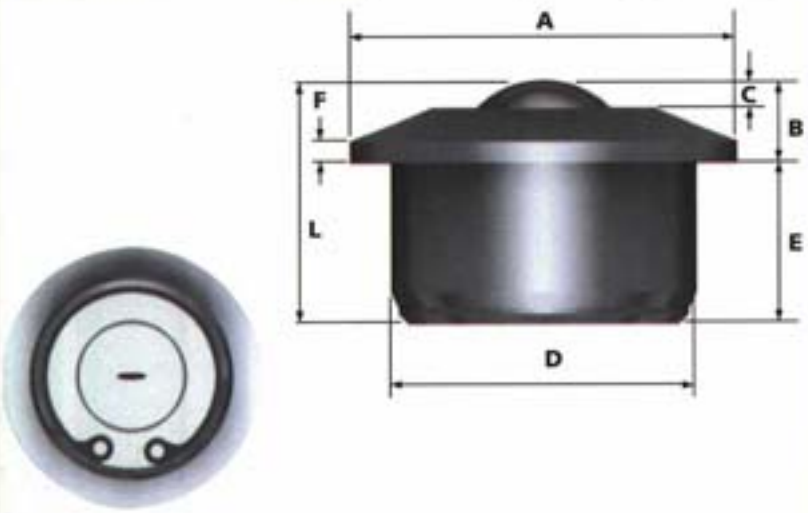

HEAVY DUTY 807

Features: High load capacity, low profile. Slotted dirt exit hole allows large debris particles to pass through.

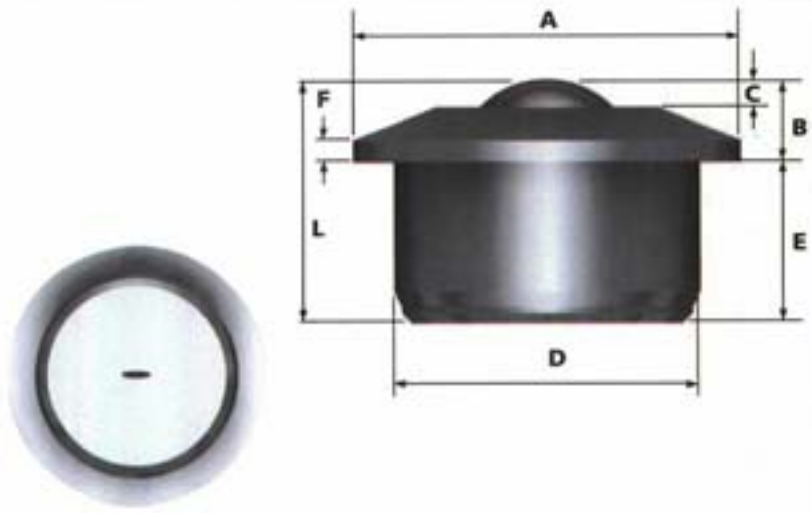

HEAVY DUTY 810

Features: High load capacity, low profile, coned outer ring.

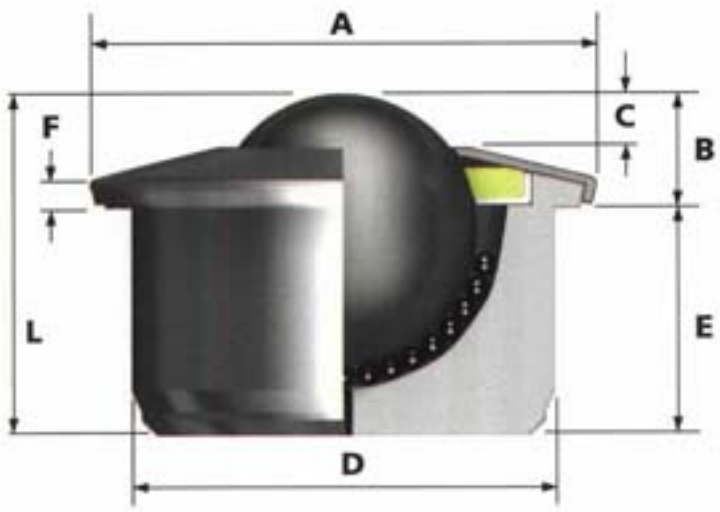

HEAVY DUTY 820

Features: High load capacity, solid body and robust outer ring for greater durability. Can be dismantled for cleaning.

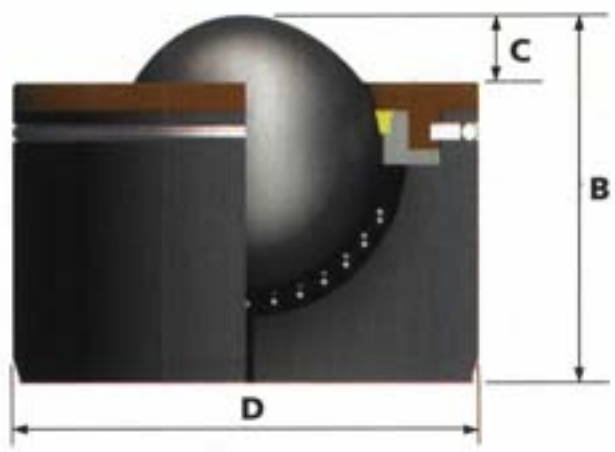

Alwayse Series 800 are solid body steel ball units.

They incorporate a seal and dirt exit hole for maximum efficiency and smooth running.

Our CNC production plant can produce special designs to individual customers requirements.

Easy fixing clips are available, ref no. CL14, for quick and effective fixing, see pages 30 and 31. When used the working height of the ball unit dimension 'B' is increased by 0.3mm.

800 Series Type 15, Stainless Steel

In general ball unit sizes from Ø15.8mm to Ø44.5mm will have unhardened components typically 304 stainless steel.

Ball units with Ø57.1mm, Ø76.2mm and Ø88.9mm balls have hardened bodies.

805 Heavy Duty Ball Units

Similar to 800 series units, the 805 ball units incorporate a stainless steel multi-hole drain plug for improved cleaning and debris removal, stainless bearings for corrosion resistance, and no seal for easy cleaning and reduced friction.

The 800, 805, 806, 807 and 810 range of ball units are dimensionally compatible with our Euro Unit range of ball transfer units, see pages 16 and 17.

REF No.	BALL SIZE (mm)	WEIGHT (KGS)	DIMENSIONS (mm)							MAXIMUM DYNAMIC LOADING (kg)		
			A Maximum Diameter	B Working Height of Ball	C Ball Exposure above Outer Ring	D Body Diameter	E Distance Under Flange to Base	F Flange Thickness	L Overall Height	TYPE 13 Carbon Steel Bearings, Zinc Plated Pressings LOAD UP*	TYPE 15 Stainless Steel Bearings and Pressings LOAD UP*	TYPE 16 Stainless Steel Bearings, Zinc Plated Pressings LOAD UP*
800-22	22.2	0.18	45	9.8 ±0.2	3.8	36 ±0.08	20.7	3.0	30.5	180	120	180
800-30	30	0.38	55	13.8 ±0.2	5.5	45 ±0.08	23	3.4	36.8	350	200	350
800-45	44.5	1.10	75	19	9	62 ±0.1	34.5	3.8	53.5	600	300	600
800-60	57.1	3.80	117	29.5	16.5	100 ±0.1	48	5.0	77.5	1500	1000	1000
805-30	30	0.38	55	13.8 ±0.2	5.5	45 ±0.08	23	3.4	36.8	350	200	350
805-45	44.5	1.10	75	19	9	62 ±0.1	34.5	3.8	53.5	600	300	600
806-30	30	0.35	55	13.8 ±0.2	5.5	45 ±0.08	23	3.4	36.8	350	200	350
807-30	30	0.36	55	13.8 ±0.2	5.5	45 ±0.08	23	3.4	36.8	350	200	350
810-15	15.8	0.06	31	9.5 ±0.2	4	24 ±0.06	11.5	3.8	21	56	43	56
810-22	22.2	0.20	45	9.8 ±0.2	3.5	36 ±0.08	20.7	4.0	30.5	180	120	180
810-30	30	0.37	55	13.8 ±0.2	5.5	45 ±0.08	23	5.0	36.8	350	200	350
810-45	44.5	0.99	75	19	9	62 ±0.1	34.5	4.5	53.5	600	300	600
820-60	57.1	3.5	-	77.5	16.5	100 ±0.1	-	-	-	1500	-	1000
820-76	76.2	8.6	-	103	23	130 ±0.1	-	-	-	3000	-	2500
820-90	88.9	11.0	-	115	25	145 ±0.1	-	-	-	4000	-	3500

To order, specify REF N° and TYPE, i.e. 800-22-13.

General Tolerance unless stated ±0.3mm

***Please consult us when mounting in inverted position as a castor, load down.**

HI-TECH, DOUBLE SEAL, UNITS

DOUBLE SEAL

This is the first ball transfer design that incorporates double sealing for excluding debris from the bearings.

The top cover seal removes larger particles and the inner knife edge scraper seal skims liquid, paste, fine dust, etc. off the large ball and expels it through side vents.

A dirt exit hole can also be incorporated.

RUST RESISTANT UNITS (Type 15 only)

All parts are of non-rusting material, impervious to the most severe industrial environment and have high impact resistance.

The main bearing track is hardened and has been load and life tested. The ball unit runs equally well inverted or at an angle.

MATERIALS

Steel (Type 13) or stainless (Type 15) load components and bearings.

Hi-Tech Units have the same rated load capacities as the Ø25.4mm Hevi-Load units (see pages 22 & 23). The Hi-tech units have glass re-inforced nylon bodies so their weight is less than half that of the Ø25.4mm Hevi-Load units.

Stainless steel bearings with steel load components (Type 16) are available on request.

CHEMICAL RESISTANCE

High resistance to organic solvents, petrol and oil.

Seek our advice if in doubt.

TEMPERATURE

-30°C upto +100°C.

6025-0

Features: High load Capacity. Dimensionally compatible with Hevi-Load 7121.

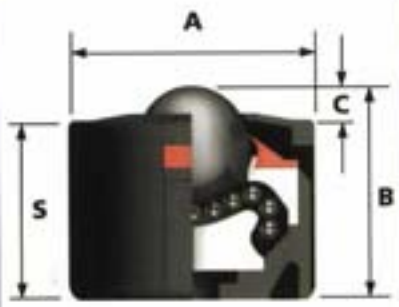

6025-1

Features: Bolt fixing high load capacity. If used for height adjustment the locknut must remain secured to the body. Maximum tightening torque is 15Nm.

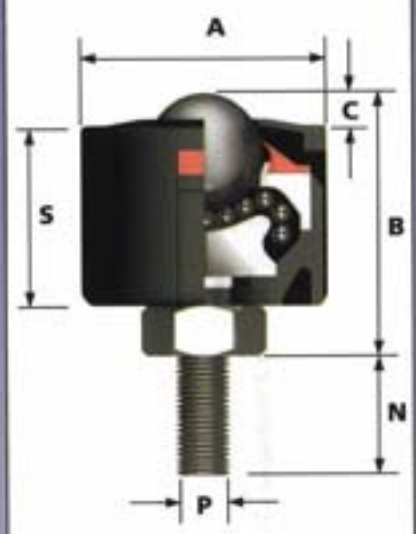

6025-2

Features: Top flange high load capacity. Dimensionally compatible with Hevi-load 7125.

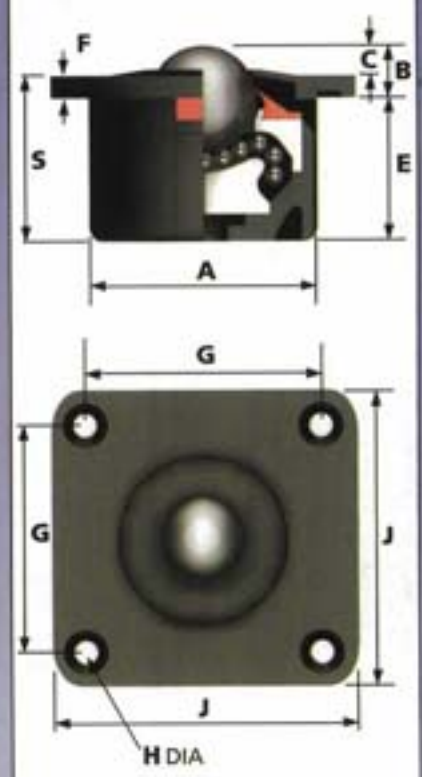

6025-3

Features: High load capacity. Ball height compatible with Hevi-load 7123.

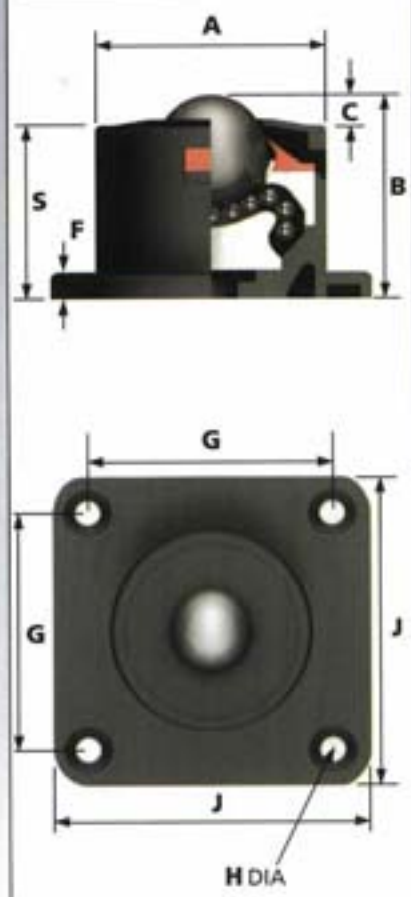

6025-4

Features: High load capacity. Coned flange for smoother on-off transfer.

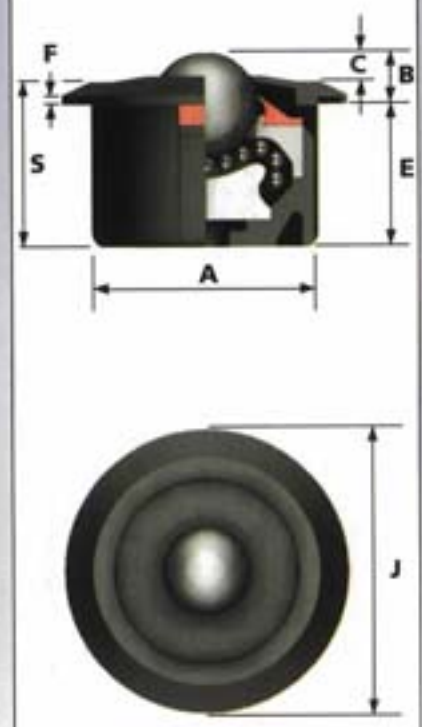

6025-5

Features: Ideal for shock loading. Stainless steel springs available on request. Compatible with Hevi-load 7136, 7139, 7137, 7135.

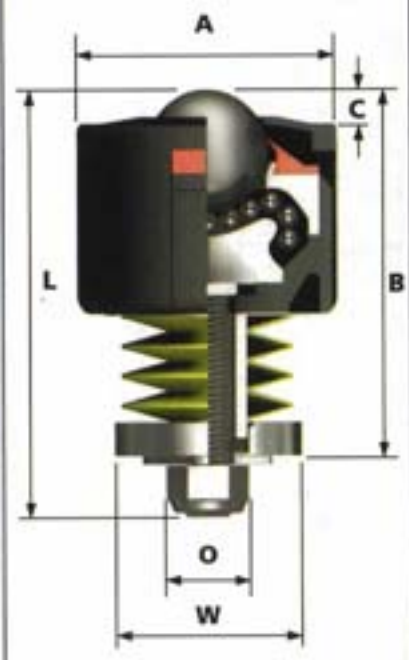

HI-TECH, DOUBLE SEAL, UNITS

REF No.	BALL SIZE (mm)	BEARING COMPONENTS	WEIGHT (KGS)	DIMENSIONS (mm) A Maximum Diameter	B Working Height of Ball	C Ball Exposure above Outer Ring	E Under Flange to Base	F Flange Thickness	G Centres of Fixing Holes	H Hole Diameter of Fixing Holes and countersunk Ø	J Major Flange Size	N Length of Thread	P Thread Size	S Base to Top of Body	DYNAMIC LOAD CAPACITY (kg) TYPE 13 Carbon Steel Bearings, Zinc Plated Pressings	TYPE 15 Stainless Steel Bearings and Pressings
TYPE 0																
6025-0-15	25.4	Stainless	0.238	50.8	45.0	6.7	-	-	-	-	-	-	-	38.3	-	240
6025-0-13		Ferrous													320	-
TYPE 1																
6025-1-15	25.4	Stainless	0.274	50.8	53	6.7	-	-	-	-	-	17.6 32.6 42.6	M10	38.3	-	240
6025-1-13		Ferrous													320	-
TYPE 2																
6025-2-15	25.4	Stainless	0.260	50.8	13.0	6.7	32.0	6.3	58.0 ±0.2	6.7 13.2	76.0	-	-	38.3	-	240
6025-2-13		Ferrous													320	-
TYPE 3																
6025-3-15	25.4	Stainless	0.260	50.8	45.0	6.7	-	6.3	58.0 ±0.2	6.7 13.2	76.0	-	-	38.3	-	240
6025-3-13		Ferrous													320	-
TYPE 4																
6025-4-15	25.4	Stainless	0.250	50.8	13.0	6.7	32.0	3.0	-	-	68.6	-	-	38.3	-	240
6025-4-13		Ferrous													320	-

General Tolerance unless stated ±0.3mm

				DIMENSIONS (mm) A Maximum Diameter	B Working Height of Ball	C Ball Exposure Above Outer Ring	L Overall Length	O M10 Nut Clearance Diameter	W Collar Diameter	DYNAMIC SUPPORT LOAD (Kg)	LOAD FOR MAXIMUM DEFLECTION (Kg)	(mm)
TYPE 5												
6025-5-15A	25.4	Stainless	0.330	50.8	61.9	6.7	77.0	20.0	38.1	7	100	3.2
6025-5-13A		Ferrous										
6025-5-15B	25.4	Stainless	0.330	50.8	61.5	6.7	77.0	20.0	38.1	23	110	3.2
6025-5-13B		Ferrous										
6025-5-15C	25.4	Stainless	0.330	50.8	60.7	6.7	77.0	20.0	38.1	45	120	3.2
6025-5-13C		Ferrous										
6025-5-15D	25.4	Stainless	0.335	50.8	61.9	6.7	77.0	20.0	38.1	70	125	3.2
6025-5-13D		Ferrous										
6025-5-15E	25.4	Stainless	0.470	50.8	81.0	6.7	98.4	20.0	38.1	90	210	3.2
6025-5-13E		Ferrous										
6025-5-15F	25.4	Stainless	0.470	50.8	79.8	6.7	98.4	20.0	38.1	140	245	3.2
6025-5-13F		Ferrous										
6025-5-15G	25.4	Stainless	0.480	50.8	81.0	6.7	98.4	20.0	38.1	180	270	3.2
6025-5-13G		Ferrous										
6025-5-15H	25.4	Stainless	0.490	50.8	81.0	6.7	98.4	20.0	38.1	230	310	3.2
6025-5-13H		Ferrous										

To order, specify REF N°, i.e. 6025-0-15.

General Spring Rating Tolerance unless stated ±10%

HEVI-LOAD UNITS 0,1,2 & 3

Alwayse Hevi-Load Units are designed and manufactured to precise standards.

They offer the highest performance available in load transfer applications with load ball sizes from 12.7mm to 50.8mm diameters and a load capacity range from 35kg to 2000kg used either ball up or ball down.

Hevi-Load Units run on the re-circulating ball principal. The load ball rotates on a bed of small balls supported on a hardened steel, precision machined table.

They can work at maximum capacity in temperatures from - 30°c to +100°c.

Drain hole or grease points can be incorporated on request.

No spanner flats for 7110 and 7106 Hevi-Load Units. *Models marked with an asterisk have a bearing shell and are assembled with no felt seal.

Type 15 Units (all stainless steel) available on request. When using stainless balls, reduce Type 13 load capacity by 33.3%.

All units are machined using CNC machines from one piece of steel, therefore flanges and threads are integral.

All hevi-load units have a zinc iron black coated housing for corrosion resistance.

HEVI-LOAD 0

Features: High load capacity, robust body.
The Hevi-Load 7121 is dimensionally compatible with the Hi-Tech 6025-0.

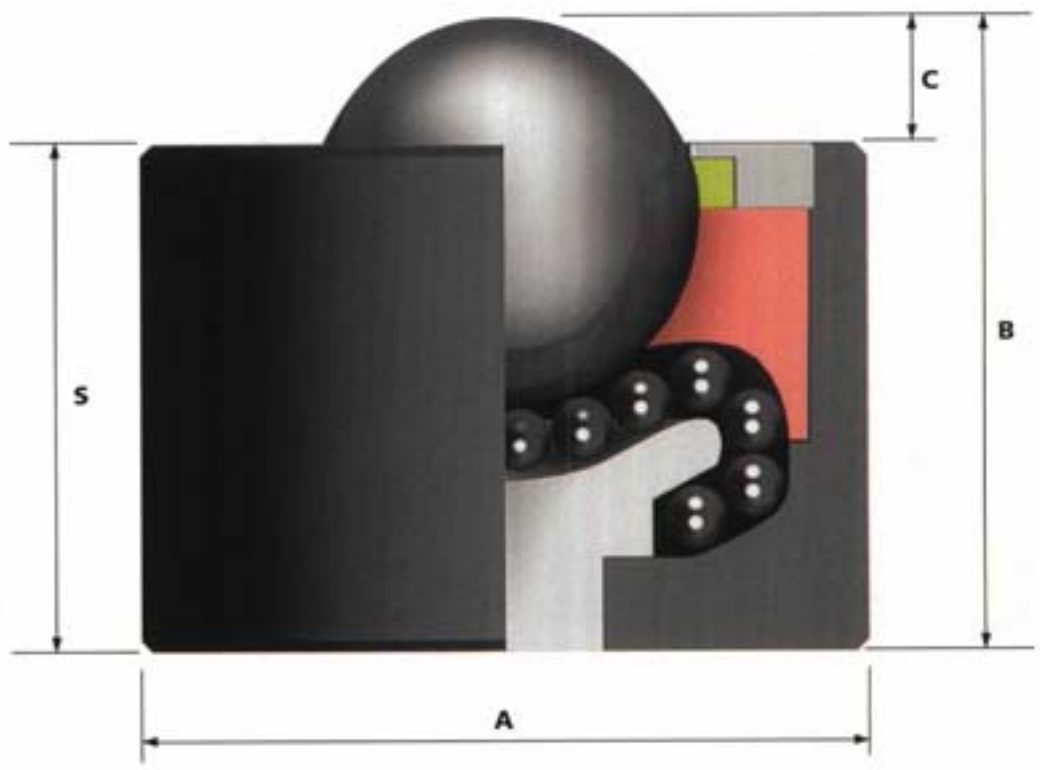

HEVI-LOAD 1

Features: High load capacity, bolt fixing. Two spanner flats for fixing and removing. Drill hole fixing. Maximum tightening torques range from 15Nm for M8 to 25Nm for M24.

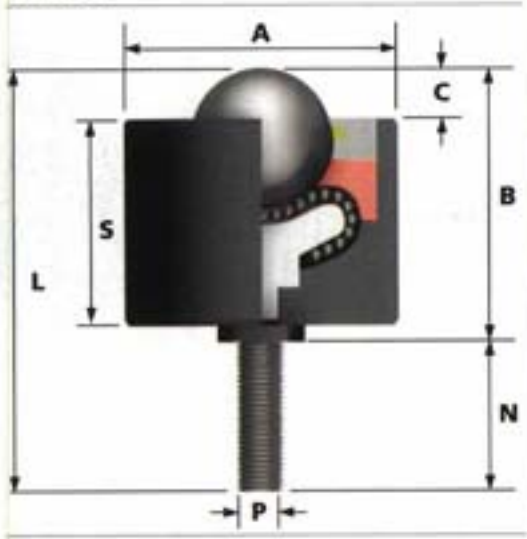

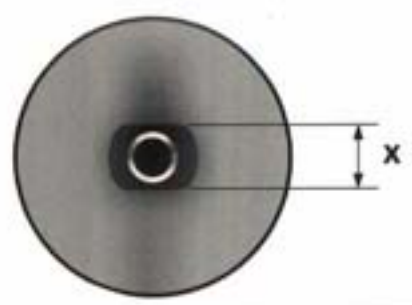

HEVI-LOAD 2

Features: High load capacity, top flange fixing. The Hevi-Load 7125 is dimensionally compatible with the Hi-Tech 6025-2.

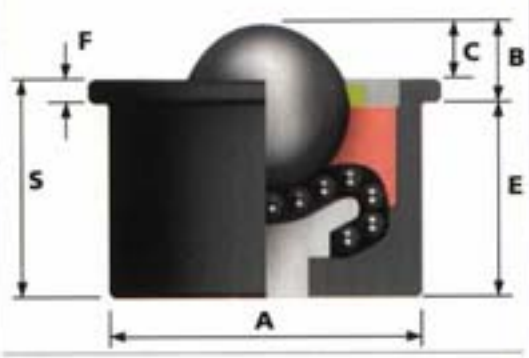

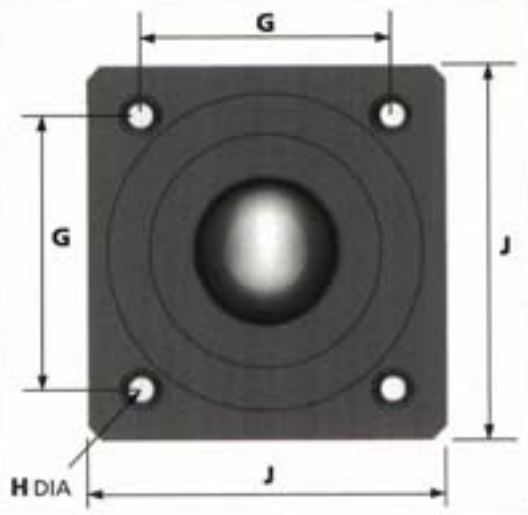

HEVI-LOAD 3

Features: High load capacity, bottom flange fixing. Drill hole fixing. The Hevi-Load 7123 is dimensionally compatible with the Hi-Tech 6025-3.

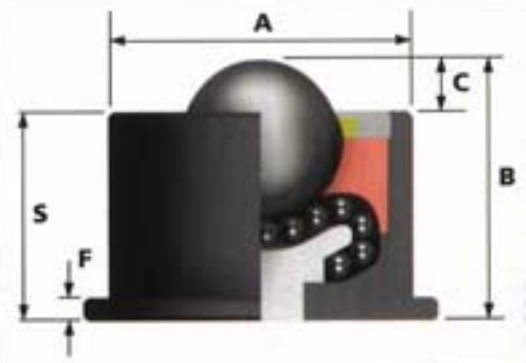

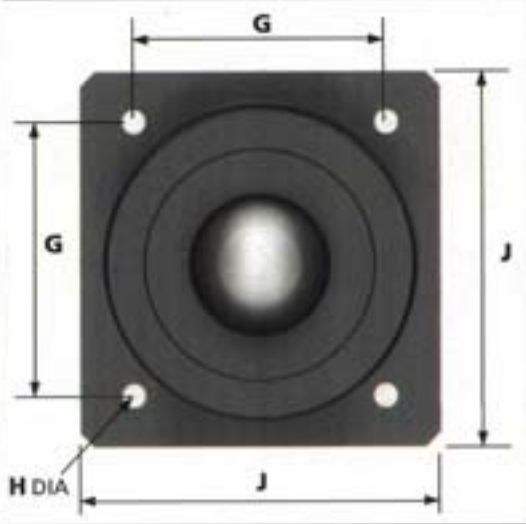

HEVI-LOAD UNITS 0,1,2 & 3

PATTERN	REF No.	BALL SIZE (mm)	WEIGHT (KGS)	DIMENSIONS (mm) A Maximum Diameter	B Working Height of Ball	C Ball Exposure above Outer Ring	L Overall Length	N Length of Thread	S Base to Top of Body	P Thread Size	X Dimension Across Flats	DYNAMIC LOAD CAPACITY (kg) TYPE 13 Carbon Steel Balls.	TYPE 16 Stainless Steel Balls.
HEVI-LOAD 0	7101*	12.7	0.036	20.6	19.6	3.5	-	-	16.1	-	-	35	35
	7120	25.4	0.394	44.5	41.4	5.6			35.8			135	135
	7121		0.550	50.8	44.7	6.1			38.6			320	215
	7150	38.1	1.0	60.0	61.5	13			48.5			1000	670
	7170	50.8	5.02	101.6	98.4	14.3			84.1			2000	1330
HEVI-LOAD 1	7110*	12.7	0.042	20.6	19.6	3.5	35.8	16.2	16.1	5/16" UNF	-	35	35
	7106*									M8			
	7127	25.4	0.431	44.5	48.3	5.6	72.4	24.1	35.8	1/2" UNF	19	135	135
	7128									M12			
	7130		0.581	50.8	51.3	6.1	77	25.7	38.6	M12	19	320	215
	7131									1/2" UNF			
	7153	38.1	1.14	60.0	73.5	13	114.3	40.8	48.5	M20	30	1000	670
	7154									3/4"UNF			
	7172	50.8	5.26	101.6	109.1	14.3	159	49.9	84.1	M24	38	2000	1330
	7173									1"UNF			

				DIMENSIONS (mm) A Maximum Diameter	B Working Height of Ball	C Ball Exposure above Outer Ring	E Distance Under Flange to Base	F Flange Thickness	G Centres of Fixing Holes	H Hole Diameter & Fixing Holes	J Major Flange Size	S Base to Top of Body	DYNAMIC LOAD CAPACITY (kg) TYPE 13 Carbon Steel Balls.	TYPE 16 Stainless Steel Balls.
HEVI-LOAD 2	7104*	12.7	0.082	23.8	11.2	3.5	11.2	3.2	34.8 ±0.2	2x3.6	44.5	19.1	35	35
	7124	25.4	0.463	44.5	10.3	5.6	31.3	4.7	44.5 ±0.2	4x5.6	57.2	36	135	135
	7125		0.746	50.8	13.0	6.1	32.0	6.9	57.9 ±0.2	4x7.1	76.2	38.9	320	215
	7152	38.1	1.24	60.0	25.4	13	35.8	12.4				48.2	1000	670
	7171	50.8	6.14	101.6	33.3	14.3	65.0	19.0	101.6 ±0.2	4x11	127.0	84	2000	1330
HEVI-LOAD 3	7103*	12.7	0.086	23.8	22.6	3.5	-	3.2	34.8 ±0.2	2x3.6	44.5	19.1	35	35
	7122	25.4	0.459	44.5	41.4	5.6	-	4.8	44.5 ±0.2	4x5.6	57.2	35.8	135	135
	7123		0.735	50.8	45.5	6.4	-	6.3	57.9 ±0.2	4x7.1	76.2	39.1	320	215
	7151	38.1	1.3	60.0	62.2	13	-	12.4				49.2	1000	670
	7174	50.8	5.52	101.6	98.3	14.3	-	9.6	101.6 ±0.2	4x11	127.0	84.0	2000	1330

Hevi-Load ball units Ref. No's 7104 and 7103 have a round flange with two fixing holes.

To order, specify REF N° and TYPE, i.e. 7101-13.

General Tolerance unless stated ±0.3mm

ALWAYSE

HEVI - LOAD 5

Features: High load capacity, greater shock loading protection. Screw fixing collar for Ø38.1mm and Ø50.8mm ball units only, for secure fixing in ball down applications.

*Ball units 7107, 7108 and 7109 incorporate the shell ball design and have no seal.

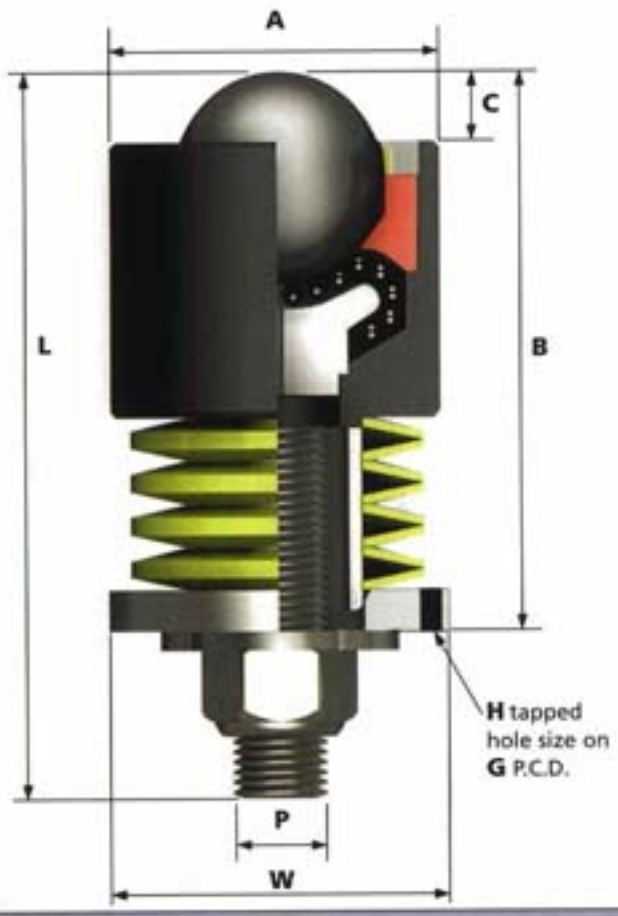

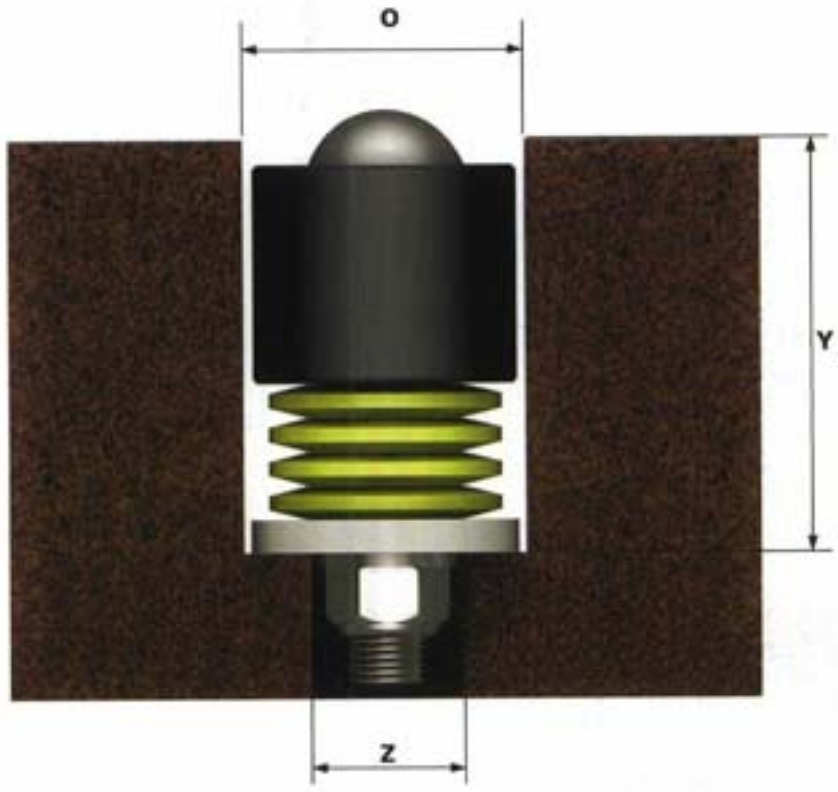

HEVI - LOAD 6

Features: Compact, interference fitting, greater shock loading protection.

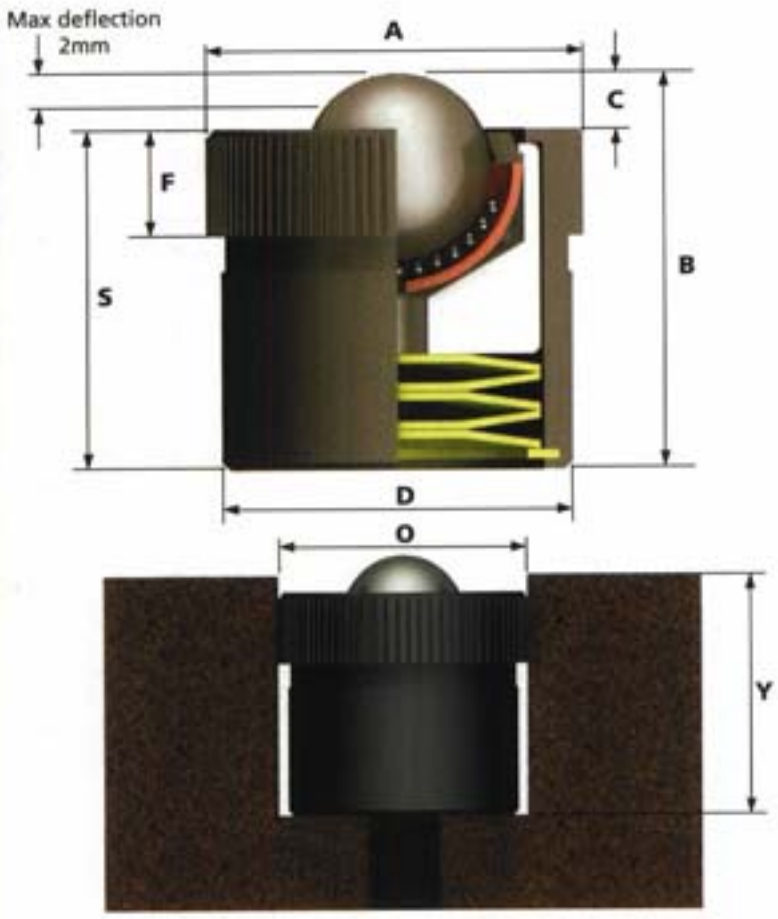

DIE LIFTERS

Features: Tolerance ring for interference fitting for ball up and ball down fitting. Greater shock loading protection.

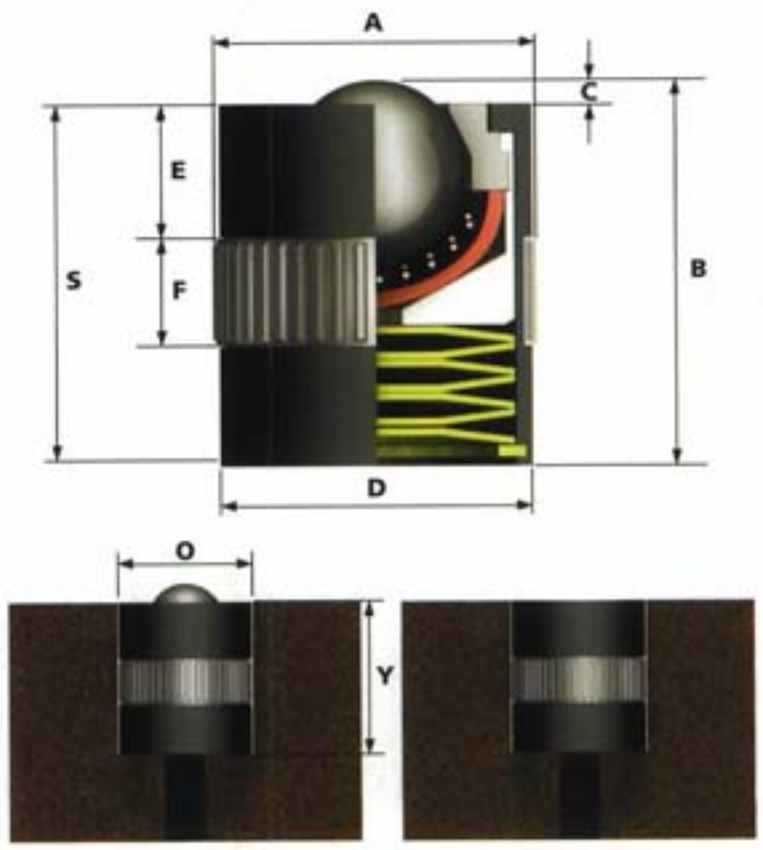

At zero deflection

At maximum deflection

PATTERN	REF No.	BALL SIZE (mm)	WEIGHT (KGS)	DIMENSIONS (mm) A Maximum Diameter	B Working Height of Ball	C Ball Exposure above Outer Ring	G P.C.D. or Centres of Fixing Holes	H Tapped Hole Size	L Overall Length	O Seating Hole Diameter	P Thread Size	W Collar Diameter	Y Minimum Hole Depth	Z Nut Clearance Diameter	DYNAMIC LOAD CAPACITY (kg) SUPPORT LOAD (Kg) TYPE 13 Carbon Steel Bearings, Zinc Plated Pressings	SUPPORT LOAD (Kg) TYPE 16 Stainless Steel Bearings, Zinc Plated pressings	LOAD FOR MAXIMUM DEFLECTION (Kg) TYPE 13 Carbon Steel Bearings, Zinc Plated Pressings	LOAD FOR MAXIMUM DEFLECTION (Kg) TYPE 16 Stainless Steel Bearings, Zinc Plated pressings	MAXIMUM DEFLECTION (mm)
															General Spring Rating Tolerance ±10%				
HEVI-LOAD 5	7107*	12.7	0.067	20.6	32.2	3.5	-	-	47.0	22	M8	20.6	30.2	16	7	7	30	30	2
	7108*				31.8								29.8		15	15	35	35	
	7109*		0.069		32.2								30.2		25	25	40	40	
	7138	25.4	0.517	44.5	61.9	5.6		-	77.0	46	M10	38.1	58.7	22	7	7	100	100	3.2
	7132				61.5								58.3		25	25	110	110	
	7133				60.7								57.5		45	45	120	120	
	7134		0.522		61.9								58.7		70	70	125	125	
	7135		0.795	50.8	81.0	6.1			98.4	52			77.8		90	90	210	210	
	7136				79.8								76.6		140	140	245	245	
	7139		0.804		81.0								77.8		180	180	270	270	
	7137		0.813												230	230	310	310	
	7155	38.1	1.860	60.0	115.5	13	50.8 ±0.2	3x M5	161.1	62	M16	59.4	109.9	32	225	225	630	630	5.6
	7158		1.940		121.3								115.7		310	185	685	380	
	7159		2.040		128.2								122.6		460	230	765	410	
	7156		1.980		127.0								121.4		565	375	830	685	
	7160		2.220		145.1				189.7				139.5		690	460	875	660	
	7157		2.620		156.4								150.8		760	565	910	745	
	7178	50.8	9.0	101.6	179.4	14.3	76 ±0.2	4x M8	200.8	103	M24	101.6	173.1	44	795	335	1370	660	6.3
	7175				177.4								171.1		1000	685	1615	955	
	7176				174.6								168.3		1235	830	1785	1030	
	7177				171.5								165.2		1560	930	1950	1520	

				DIMENSIONS (mm) A Maximum Diameter	B Working Height of Ball	C Ball Exposure above Outer Ring	D Body Diameter	F Knurl Thickness	O Seating Hole Diameter	S Base to Top of Body	Y Minimum Hole Depth					
HEVI-LOAD 6	7105	12.7	0.078	25.6	28.5	3.1	25.4	8	25.4 +0.15 +0.05	25.4	26.5	25	25	40	40	2

				DIMENSIONS (mm) A Maximum Diameter	B Working Height of Ball	C Ball Exposure above Outer Ring	D Body Diameter	E Top of Body to Groove	F Groove Width	O Seating Hole Diameter	S Base to top of Body	Y Minimum Hole Depth					
													General Spring Rating Tolerance ±10%				
DIE-LIFTERS	DL-24	12.7	0.074	24.5	30	1.5	23.9	9	10.5	24.1	28.5	28.6	40	40	90	90	1.5
	DL-30	15.8	0.127	30.5	36	1.5	29.9	12	10.5	30.1	34.5	34.6	60	60	110	110	1.5
	DL-40	25.4	0.320	40.5	48	1.5	39.8	12	10.5	40.1	46.5	46.6	100	100	175	175	1.5
	DL-50	30	0.660	50.5	60	1.5	49.9	15	12.3	50.1	58.5	58.6	335	200	585	465	1.5
	DL-70	38.1	2.000	71	80	2	70	19	19	70.2	78	78.1	500	325	720	570	2

To order, specify REF N° and TYPE, i.e. 7107-13.

General Tolerance unless stated ±0.3mm

SPRING LOADED UNITS

Alwayse spring loaded units are used in applications such as:-

Guillotines; Presses;
Moulding Machines; Tool Bases;
Press Brakes; Shock Loading applications.

Spring loaded ball units reduce damage caused by shock loads. They also allow for dimension changes due to temperature and self-adjust to evenly distribute loads.

1507, 1508 and 1509 Units

These units incorporate a plastic scraper seal, which keeps debris outside the ball unit.

Spring loaded ball unit sizes Ø31.7mm, Ø39.7mm and Ø50.8mm have dirt exit holes as standard. All other spring loaded ball units have felt or foam seals as standard.

Spring loaded ball units can be used as die-lifters, inverted or at an angle.

See pages 24 and 25 for details of our Hevi-Load spring loaded ball units and Die-Lifter ball units.

Completely stainless steel (Type15) spring loaded ball units also available upon request with reduced support loads and depress loads.

Spring loaded ball units with ball sizes of Ø25.4mm also available upon request with nylon load ball and stainless bearings (Type 14).

The Type 14 ball units are suitable for light load applications and when object surface protection is required.

The 1507 and 1509 ball units have 2mm thick pressed steel flanges.

Do not remove the circlip on any of the spring loaded ball units.

* Other loads available upon request.

LARGE TOP FLANGE

Features: Large top flange fixing. Low profile.

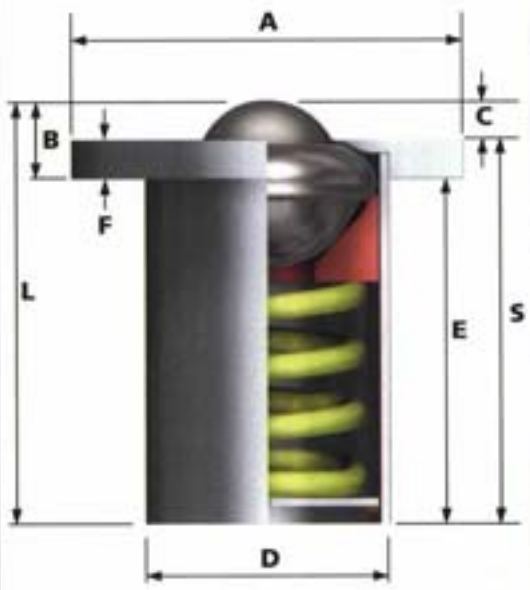

(1018 shown here)

LARGE BOTTOM FLANGE

Features: Large bottom flange fixing. High profile.

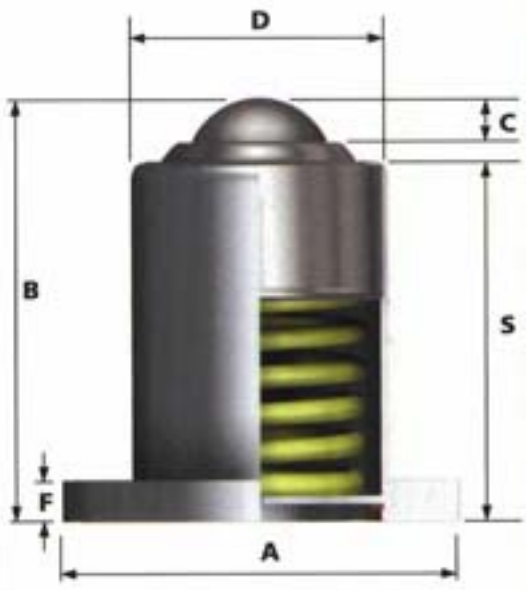

(1032 shown here)

5320

Features: The 5320 ball unit is assembled with a 522-0 ball unit (see pages 16-17). The ball unit has a dirt exit hole.

Please see large top flange for dimensions.

PLAIN BODY

Features: Plain body. Low profile.

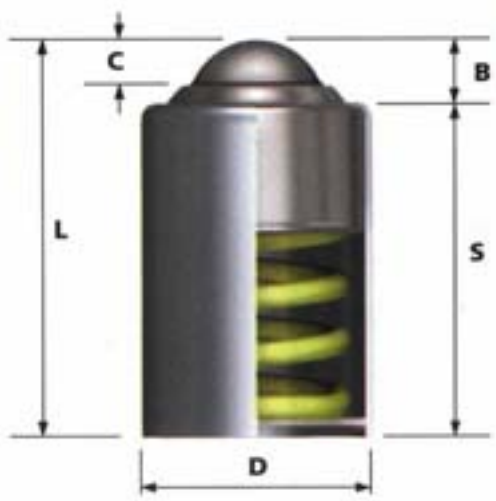

(1508 shown here)

SMALL TOP FLANGE

Features: Small flange. Low profile.

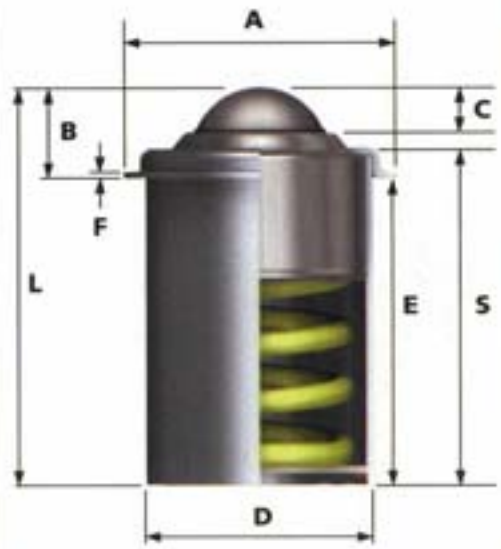

(1509 shown here)

SPRING LOADED UNITS

REF No.	BALL SIZE (mm)	WEIGHT (KGS)	DIMENSIONS (mm) A Maximum Diameter	B Working Height of Ball	C Ball Exposure above Outer Ring	D Body Diameter	E Distance Under Flange to Base	F Flange Thickness	G P.C.D. or Centres of Fixing Holes	H Hole Diameter of Fixing Holes & No. of Fixing Holes	L Overall Height	S Base to Top of Body	SUPPORT DYNAMIC LOAD (kg) TYPE 13 Carbon Steel Bearings, Zinc Plated Pressings / TYPE 16 Stainless Steel Bearings, Zinc Plated Pressings	LOAD TO FULLY DEPRESS (kg)
LARGE TOP FLANGE														
3011	19	0.42	66.6 +0.0 -1.0	11.4	3.5	36.5	51.6	7.9	50.8 ±0.2	3x 7	63	59.5	10	30
5320	22.2	0.26	50	18.5 ±0.2	4	39	33	14	-	-	51.5	47	170*	250*
1018	25.4	0.57	75 +0.0 -1.0	13.8	5.9	44.5	53.3	7.9	60.3 ±0.2	3x 7	67.1	61.2	35	100
1507	25.4	0.40	71.3 +0.0 -1.0	19.3	6.7	44.5	52.9	2	60.4 ±0.2	2x 5.1	72.2	61.3	50	130
1028	31.7	1.16	89 +0.0 -1.0	17	7.5	60.0	77.5	9.5	73 ±0.2	3x 7	94.6	87.1	100	180
2010	39.7	2.04	101.6 +0.0 -1.0	17.7	8.2	69.8	90		85.7 ±0.2	3x 9	107.7	99.5		170
4008	50.8	5.1	152.4 +0.0 -1.0	25.7	13.0	101.6	114	12.7	127 ±0.2		139.7	126.7	170	410
LARGE BOTTOM FLANGE														
3012	19	0.42	66.6 +0.0 -1.0	65.1	4.7	36.5	-	7.9	50.8 ±0.2	3x 7	-	55.6	10	35
1510	25.4	0.45	75 +0.0 -1.0	72.9	6.7	44.5	-	7.9	60.3 ±0.2	3x 7	-	60.4	50	130
1032	31.7	1.02	89 +0.0 -1.0	95.3	7.7	60.0	-	9.5	73 ±0.2	3x 7	-	84.9	100	200
PLAIN BODY														
3009	19	0.26	-	9.5	4.7	36.5	-	-	-	-	65.1	55.6	10	35
1016	25.4	0.38	-	11.9	6.3	44.5					70.6	58.7	35	140
1508	25.4	0.38	-	12.5	6.7	44.5					72.9	60.4	50	130
1026	31.7	0.86	-	10.4	7.7	60.0					95.3	84.9	100	200
2008	39.7	1.46	-	12.7	9.1	69.8					107.6	94.9		190
4006	50.8	4.2	-	13	13	101.6					139.7	126.7	170	410
SMALL TOP FLANGE														
3010	19	0.30	45 +0.0 -1.0	11.4	3.5	36.5	51.6	7.9	-	-	63	59.5	10	30
1017	25.4	0.44	50 +0.0 -1.0	13.8	5.9	44.5	53.3				67.1	61.2	35	100
1509	25.4	0.39	56 +0.0 -1.0	19.3	6.7	44.5	52.9	2			72.2	61.3	50	130
1027	31.7	0.99	75 +0.0 -1.0	17	7.5	60.0	77.5	9.5			94.6	87.1	100	180
2009	39.7	1.8		17.7	8.2	69.8	90				107.7	99.5		170
4007	50.8	4.4	114.3 +0.0 -1.0	25.7	13	101.6	114	12.7			139.7	126.7	170	410

* Other loads available upon request.

To order, specify REF N° and TYPE, i.e. 3011-13.

General Spring Rating Tolerance ±10%

General Tolerance unless stated ±0.3mm

ALWAYSE

TUFF SERIES HEAVY DUTY UNITS

Alwayse *TUFF* SERIES Heavy Duty units are built to provide a long working life and to withstand harsh conditions.

They have a solid machined body with chrome steel bearings and incorporate both dust seal and dirt exit hole (except No. 0519).

They provide a higher load capacity than standard units.

Solid steel housing for attachment purposes, but not shock loading.

All units are machined using CNC machines from one piece of steel, therefore flanges and threads are integral.

ALSO AVAILABLE

All patterns (i.e.: 21,22,23 and 24) of ref nos 0519, 3019 and 1019 are available with a nylon main ball (Type 14) ideal for light load and reduced marking applications.

TUFF HEAVY DUTY 21

Features: Plain solid machined body.

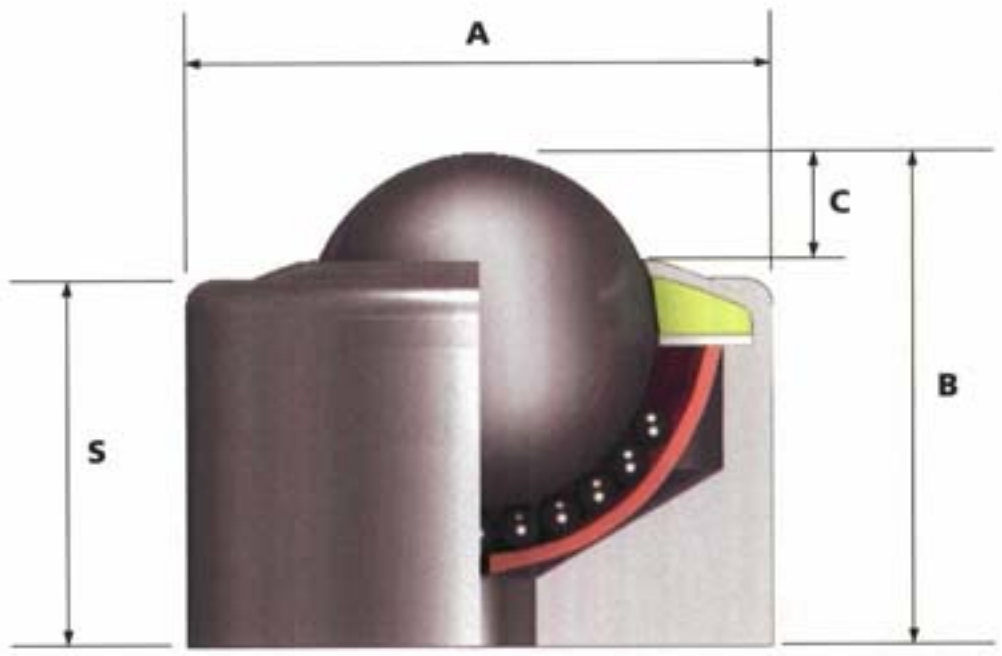

TUFF HEAVY DUTY 22

Features: Flange fixing either by using rivets or screws.

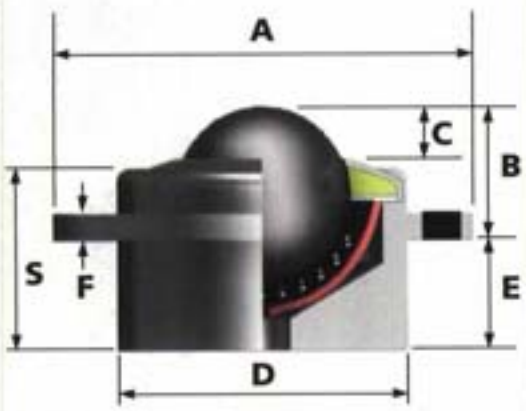

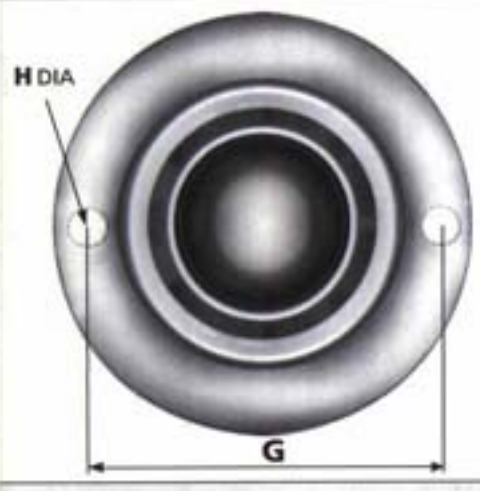

TUFF HEAVY DUTY 23

Features: Bolt, drilled hole fixing. Maximum tightening torques range from 10Nm for M6 to 20Nm for M12.

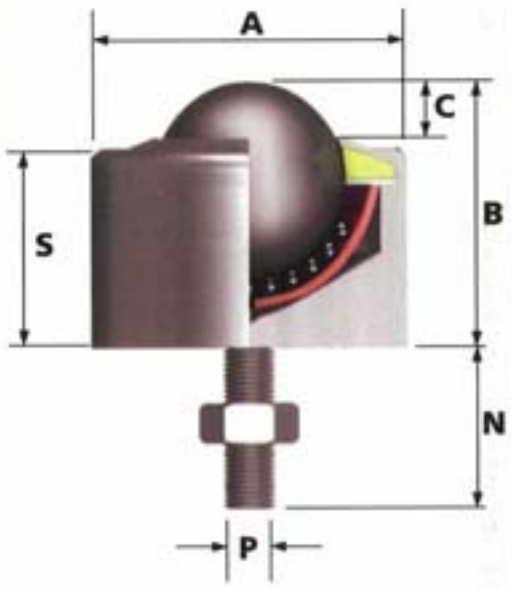

TUFF HEAVY DUTY 24

Features: Bottom flange fixing either by using rivets or screws. Drilled hole fixing.

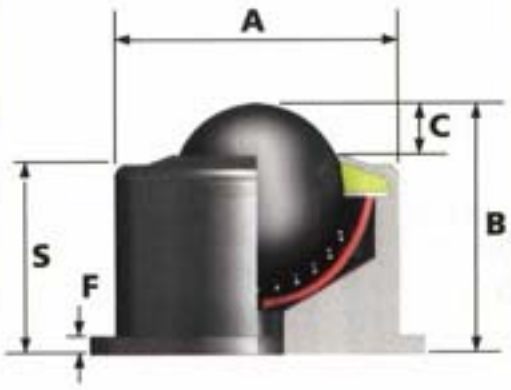

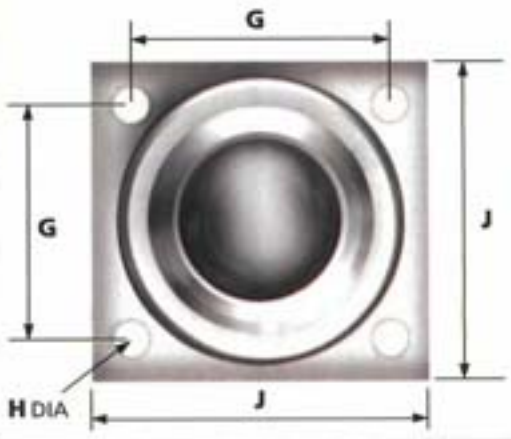

 IMPORTANT - IF YOU ARE UNSURE, CONSULT OUR FREE TECHNICAL SERVICE. TELEPHONE: 0121 772 8481 FACSIMILE: 0121 771 0327

TUFF SERIES HEAVY DUTY UNITS

REF No.	BALL SIZE (mm)	WEIGHT (KGS)	DIMENSIONS (mm) A Maximum Diameter	B Working Height of Ball	C Ball Exposure above Outer Ring	D Body Diameter	E Distance Under Flange to Base	F Flange Thickness	G Centres of Fixing Holes	H Hole Diameter of Fixing Holes	J Major Flange Size	N Length of Thread	P Thread Size	S Base to Top of Body	DYNAMIC LOAD CAPACITY (kg) TYPE 13 Carbon Steel Bearings, Zinc Plated Pressings / TYPE 16 Stainless Steel Bearings, Zinc Plated Pressings	TYPE 15 Stainless Steel Bearings and Pressings
0519-21	12.7	0.036	20	20	2	-	-	-	-	-	-	-	-	17	25	25
0519-22		0.051	32	12		20	8	4	26 ±0.2	3	-	-	-	17		
0519-23		0.042	20	20		-	-	-	-	-	-	28	M6	17		
0519-24		0.096	20	25		-	-	6	24 ±0.2	6.5	35	-	-	22		
3019-21	19	0.120	30	30	4	-	-	-	-	-	-	-	-	26	50	50
3019-22		0.168	50	14		30	16	5	40 ±0.2	5	-	-	-	26		
3019-23		0.124	30	30		-	-	-	-	-	-	25	M8	26		
3019-24		0.220	30	35		-	-	6	31 ±0.2	7	44.5	-	-	31		
1019-21	25.4	0.177	35	35	7	-	-	-	-	-	-	-	-	28	125	125
1019-22		0.282	60	20		40	15	5	49 ±0.2	5	-	-	-	28		
1019-23		0.190	35	35		-	-	-	-	-	-	40	M8	28		
1019-24		0.294	35	40		-	-	6	35 ±0.2	7	50	-	-	33		
1029-21	31.7	0.486	50	45	8	-	-	-	-	-	-	-	-	37	250	250
1029-22		0.584	75	24		50	21	5	62.5 ±0.2	5	-	-	-	37		
1029-23		0.500	50	45		-	-	-	-	-	-	40	M10	37		
1029-24		0.740	50	50		-	-	8	49 ±0.2	7	63.45	-	-	42		
2019-21	39.7	0.850	60	55	9	-	-	-	-	-	-	-	-	46	500	250
2019-22		0.960	84	27		60	28	5	72 ±0.2	6	-	-	-	46		
2019-23		0.900	60	55		-	-	-	-	-	-	50	M12	46		
2019-24		1.350	60	60		-	-	10	60 ±0.2	7	80	-	-	51		

To order, specify REF N° and TYPE, i.e. 0519-21-13.

General Tolerance unless stated ±0.3mm

FIXING CLIPS

Alwayse provide a complete range of fixing clips designed specially for use with their ball transfer units.

They lock the unit securely in position without the need for special tools or machinery.

Some standard clips are described here. Special designs can also be provided, please ask for details.

The effectiveness and security of ball units attached by means of fixing clips can be influenced by size of fixing holes, table thickness and ball unit tolerances.

CL11 (stock item)

Available in three sizes only to suit ball units with body diameters of 36mm, 45mm and 62mm.

CL12 (made to order)

This clip will fit under the flange of any of our ball units that have parallel sides. If any particular size of clip is not in stock there may be a minimum order charge. Fixing hole sizes on application.

On certain units it is possible to machine a recess to retain the clip in the body of the ball unit. These units must have a solid steel body, are not stock items and are only manufactured to specific orders.

CL13 (stock item)

These are to be used with ball units with a body diameter of 24mm only.

CL14 (stock item)

Stocked for body diameter of 24mm, 36mm, 45mm and 62mm. This clip was designed for fixing ball units from the top face of a ball platform. The clip can also be used for fixing the ball unit from underneath the ball platform if clip CL11 is not suitable. The preferred table top material thickness for maximum effectiveness of the CL14 range of clips is 2mm to 4mm. The CL14 fixing clips can be used for thicker materials with a slight reduction in clip effectiveness. For maximum clip effectiveness the seating hole size should be on the minimum tolerance and the table top material thickness should be 4mm. Please see page 17 for seating hole sizes

CL14 fixing clips must be placed into the seating hole first, before the ball unit is fitted.

CL11

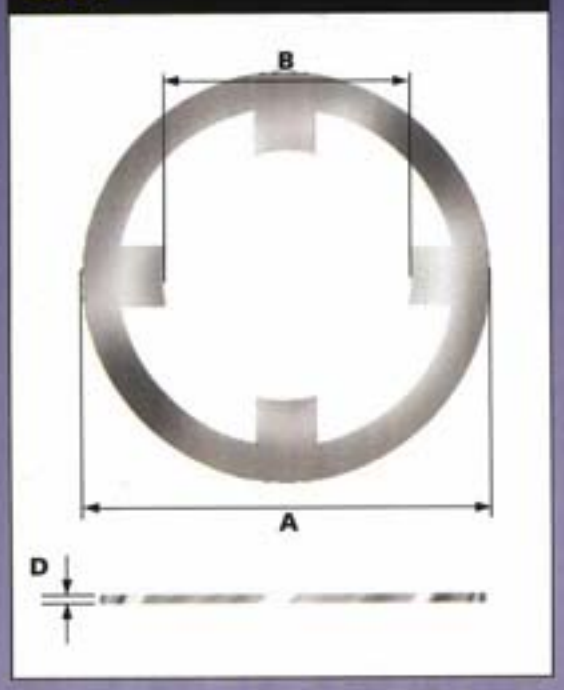

CL12

CL13

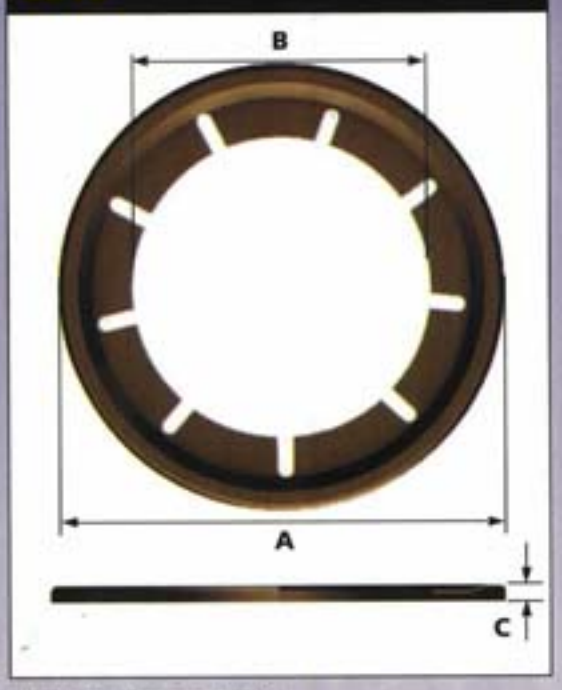

CL14

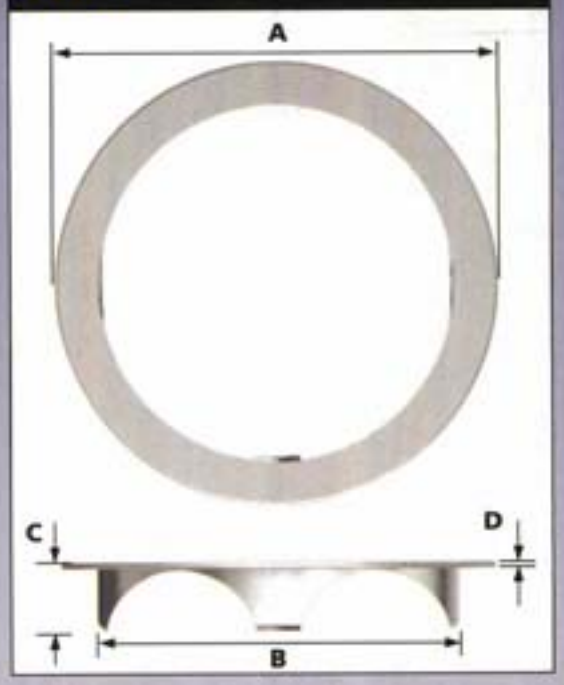

CL15 (made to order)

A circlip type clip used mainly for solid machined body units. The circlip is fitted from underneath the ball unit and is available in many sizes.

Ball units with circlip grooves are not ex stock items. The standard circlip is self colour spring steel, but plated circlips can be offered where corrosion resistance is required.

FITTING CL12 AND CL14 FIXING CLIPS

When fitting ball units with CL12 or CL14 fixing clips, do not strike the load ball to press the unit into position.

Instead, apply an even force onto the ball unit's body using a tube or similar tool.

Installation and removal tools can be supplied to ensure the correct installation of ball transfer units for the CL12 and CL14 fixing clip range. Details of the installation and removal tools are available upon request.

CL15

REF No		
CL11		

Ref No.	Flange diameter A	Inside diameter B	Material Thickness D
CL11-22	∅71.1	∅35.9	0.7
CL11-30	∅71.1	∅44.9	0.7
CL11-45	∅72.6	∅61.2	0.7

CL11 CLIP TO BE USED WITH THE FOLLOWING BALL UNITS		
CL11-22	CL11-30	CL11-45
522-0, 522-4 and 522-6 (pages 16 & 17)	530-0, 530-4 and 530-6 (pages 16 & 17)	545-0, 545-4 and 545-6 (pages 16 & 17)
800-22 and 810-22 (pages 18 & 19)	800-30, 805-30 806-30, 807-30 and 810-30 (pages 18 & 19)	800-45, 80545 and 810-45 (pages 18 & 19)

CL12

CL12 CLIP TO BE USED WITH THE FOLLOWING BALL UNITS			
1007 (Pages 8 & 9)	515-0, 515-4, 515-6 522-0, 522-4, 522-6 530-0, 530-4, 530-6 545-0, 545-4, 545-6 (Pages 16 & 17)	6025-2 and 6025-4 (Pages 20 & 21)	7104, 7124 7125, 7152 and 7171 (Pages 22 & 23)
0519-22, 3019-22 1019-22, 1029-22 and 2019-22 (Pages 28 & 29)	810-15, 800-22 810-22, 800-30 805-30, 810-30 800-45, 805-45 806-30, 807-30 810-45 and 800-60 (Pages 18 & 19)	3010, 3011, 1017 1018, 1509,1507 1027, 1028, 2009 2010, 4007 and 4008 (Pages 26 & 27)	

CL12 fixing clip sizes available upon request

CL13

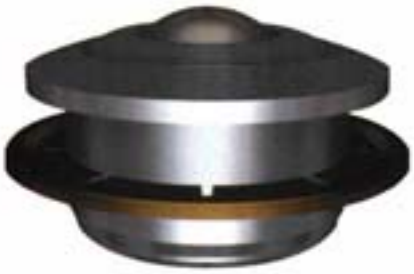

Ref No.	Flange diameter A	Inside diameter B	Length C
CL13-15	∅41.4	∅23.4	3.2

The CL13-15 fixing clip can be used with the 515-0. 515-4 and 515-6 ball units (pages 16-17) and also the 810-15 ball unit (pages 18 and 19).

CL14

Please see page 17 for seating hole sizes

Ref No.	Flange diameter A	Body outside diameter B	Length C	Material Thickness D
CL14-15	∅30.9	∅24.7	6.0	0.3
CL14-22	∅44.5	∅36.7	7.0	0.3
CL14-30	∅54.9	∅45.7	7.0	0.3
CL14-45	∅74.0	∅62.7	7.0	0.3

CL14 CLIP TO BE USED WITH THE FOLLOWING BALL UNITS			
CL14-15	CL14-22	CL14-30	CL14-45
515-0, 515-4 and 515-6 (pages 16 & 17)	522-0, 522-4 and 522-6 (pages 16 & 17)	530-0, 530-4 and 530-6 (pages 16 & 17)	545-0, 545-4 and 545-6 (pages 16 & 17)
7104 (pages 22 & 23)	800-22, 810-22 (pages 18 & 19)	800-30, 805-30, 806-30 807-30 and 810-30 (pages 18 & 19)	800-45, 805-45 and 810-45 (pages 18 & 19)
810-15 (pages 18 & 19)		1017, 1018, 1507 and 1509 (pages 26 & 27)	
		7124 (pages 22 & 23)	

CL15

CL15 CLIP TO BE USED WITH THE FOLLOWING BALL UNITS		
1004 (pages 8 & 9)	7104, 7124, 7125 7152 and 7171 (pages 22 & 23)	0519-22, 3019-22, 1019-22 1029-22 and 2019-22 (pages 28 & 29)
810-15, 800-22, 810-22 800-30, 805-30, 810-30 800-45, 805-45, 810-45 and 800-60 (pages 18 and 19)	3010, 3011, 1017, 1018 1509, 1507, 1027, 1028 2009, 2010, 4007 and 4008 (pages 26 and 27)	

Ball units with circlip grooves are available on request
CL15 fixing clip sizes available upon request

To order, specify REF N° i.e. CL11-22.
For CL12 and CL15 clips specify REF N° and ball unit REF N° i.e. CL12,1007.

TEE BLOCKS, DIE TABLES

TEE BLOCKS

Single Minute Tool and Die Changing

Our comprehensive range of tee blocks and spring loaded ball transfer units, set into the bed of your power press or machine tool, will allow effortless positioning of tooling but still allow rigid clamping.

We supply tee blocks for both standard and non-standard tee slots the length, pitch, ball height etc. being dependant on tool weight and profile.

Other sizes available on request.

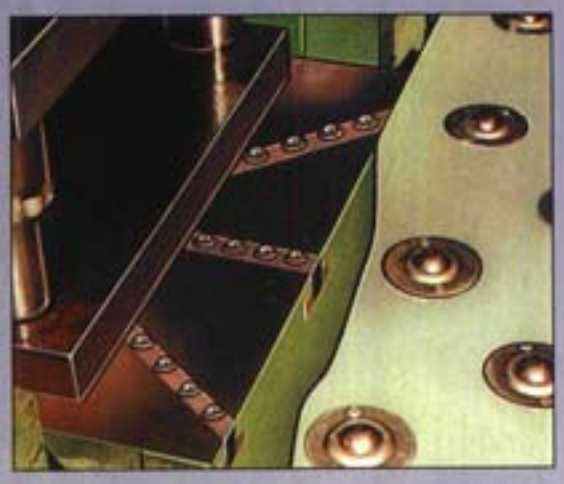

TEE BLOCKS

Tee blocks can be designed and manufactured to suit particular applications.
See pages 24 & 25 for our range of Die Lifter ball units.

Standard Tee Block Slot Proportions

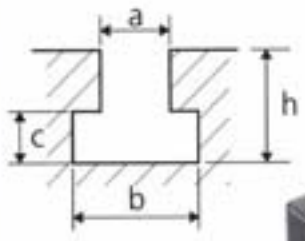

DIN 650

a	b	c	h
22	37	16	38
24	42	18	42
28	46	20	48
36	56	25	61

QUICK CHANGE DIE TABLES

For all types of moulding and stamping applications.

They allow quick, easy tool changing with storage close to the machine. All tables are fully guarded. Access to the machine via a lift-up gate if required.

Custom designed to your specific requirements, installation is carried out by our engineers.

NOTE - safety rails should be fitted where there is the possibility of loads rolling off.

QUICK CHANGE DIE TABLES

ALWAYSE

ALWAYSE ENGINEERING LIMITED

MILLER STREET
BIRMINGHAM B6 4NF
ENGLAND
TELEPHONE: +44 (0)121 380 4700
FAX: +44 (0)121 380 4701
E-MAIL: engineering@alwayse.co.uk
WEBSITE: www.alwayse.net